Service Shop

SERVICE MANUAL

MODEL

G18 ENGINE

NISSAN

NISSAN MOTOR CO., LTD.
TOKYO, JAPAN

DATSUN 1800

SERVICE MANUAL

MODEL G18

ENGINE

NISSAN

NISSAN MOTOR CO., LTD.

TOKYO, JAPAN

QUICK REFERENCE INDEX

ENGINE GENERAL ····· EG

ENGINE TUNE-UP ····· ET

ENGINE MECHANICAL ····· EM

ENGINE LUBRICATION SYSTEM ····· EL

COOLING SYSTEM ····· CO

FUEL SYSTEM ····· EF

EMISSION CONTROL SYSTEM ····· EC

ENGINE ELECTRICAL SYSTEM · EE

SERVICE EQUIPMENT ····· SE

FOREWORD

This service manual has been prepared for the purpose of assisting service personnel of our distributors and dealers for effective service and maintenance of model G18 engine.

Since proper maintenance and service are most essential to satisfy our customers by keeping their cars in the best condition, this manual should be carefully studied. The followings should be noted for effective utilization of this manual.

1. *Since only the informations concerning the engine are described herein, please refer to both this and the DATSUN C30 SERVICE MANUAL for complete details of the car.*

2. *All the parts names in this manual conform to both DATSUN C30 PARTS CATALOG, and only the genuine service parts listed in this parts catalog should be used as replacements.*

3. *All informations, illustrations and specifications contained in this manual are based on the latest product information available at the time of publication approval.*

4. *It is emphasised that those who use this manual revise the contents according to the SERVICE JOURNAL issued by the factory, which carries the latest factory approved servicing method.*

5. *Rights for alteration in specifications and others at any time are reserved.*

DATSUN 1800

SERVICE MANUAL

MODEL G18

ENGINE

NISSAN MOTOR CO., LTD.

TOKYO, JAPAN

SECTION EG

EG

ENGINE GENERAL

EXTERNAL VIEW OF ENGINE EG-1
MAIN SPECIFICATIONS EG-2
RECOMMENDED LUBRICANTS, PETROL AND COOLANT EG-2
UNIT SERIAL NUMBER LOCATION EG-4
PERIODICAL INSPECTION AND MAINTENANCE EG-5
SPECIAL MAINTENANCE FOR EMISSION CONTROL SYSTEM EG-6

EXTERNAL VIEW OF ENGINE

External view of model G18 engine

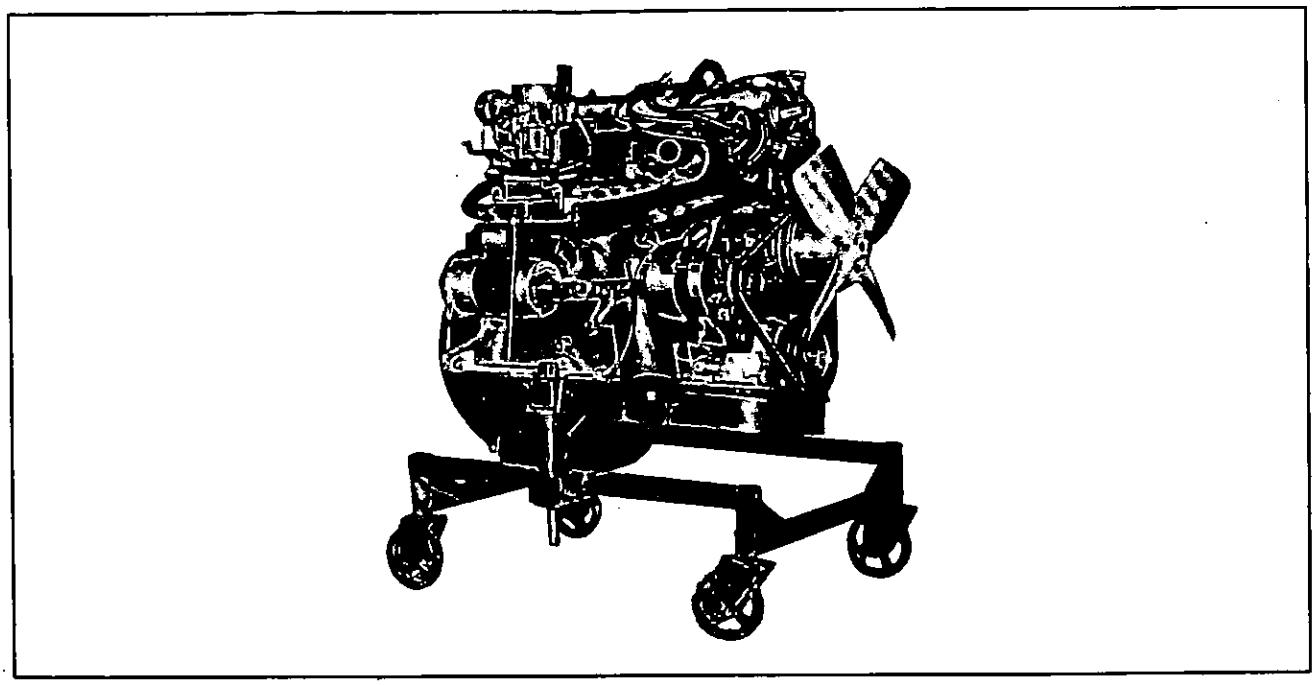

Fig. EG-1 Right hand side

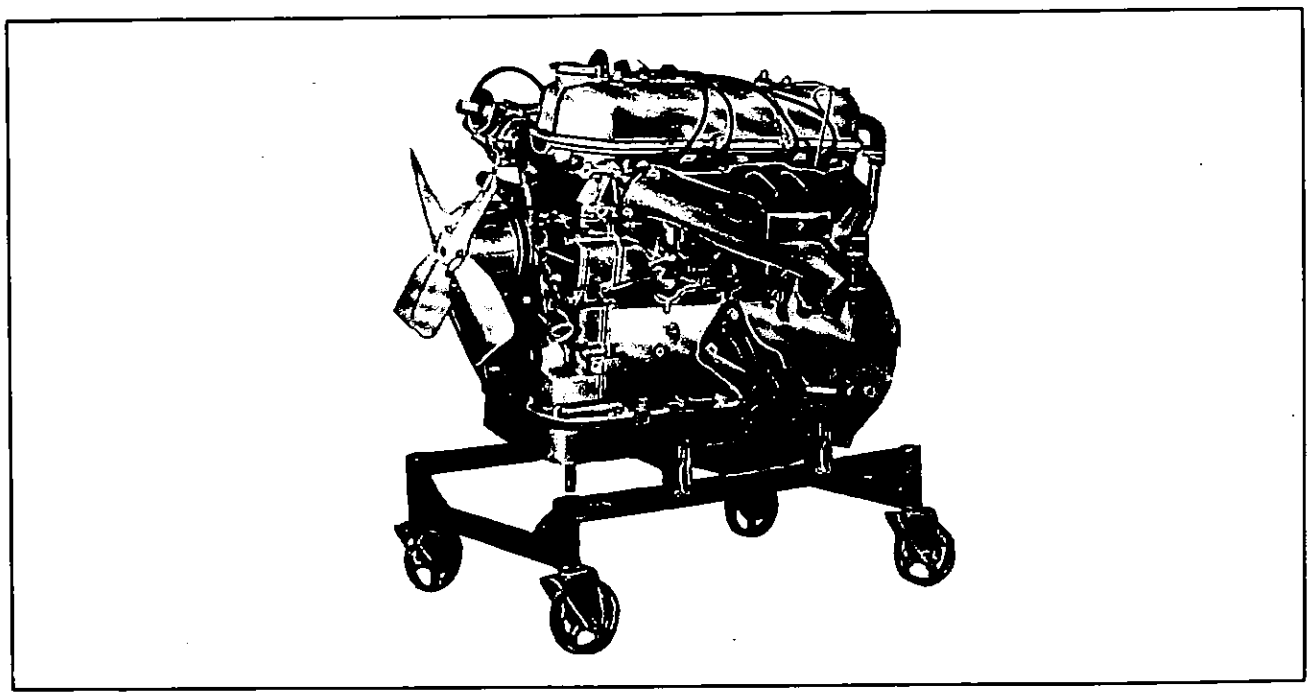

Fig. EG-2 Left hand side

MAIN SPECIFICATIONS

Engine model			G18
Number of cylinders, in line			4
Valve arrangement			OHC
Bore		mm (in.)	85 (3.346)
Stroke		mm (in.)	80 (3.150)
Displacement		c.c. (cu. in.)	1,815 (110.8)
Compression ratio			8.3 : 1
Maximum power, SAE		HP at rpm	105 at 5,600
Maximum torque, SAE		m-kg (ft. lb.) at rpm	15.9 (115.0) 3,600
Capacities	Oil pan (*) ℓ U. S. qts/U. K. qts		3.8 4.0/3.3
	Coolant ℓ U. S. qts/U K. qts		8.6 9.1/7.6

(*) The table specifies the quantity of oil which is required for periodic oil replacement, when oil filter is not replaced. Should also the filter be replaced, the total quantity is about 4.4 ℓ (4.7 U. S. qts/3.9 U. K. /qts).

RECOMMENDED LUBRICANTS PETROL AND COOLANT

Use the following grades of oil, gasoline and coolant.

Temperature	Engine oil (MS)
Above 32° C (90° F) average	SAE 30, 10W-30
32° to 0° C (90° to 32° F) - minimum	SAE 20, 20W, 10W-30
0° to -12° C (32° to 10° F) - minimum	SAE 10W, 10W-30
Below -12° C (10° F) - minimum	SAE 10W, 10W-30

Recommended lubricants

Lubricants / Maker	Engine oil		Multi-purpose grease
	Multi-grade	Regular (single grade or double grade)	
TAXACO INC.	Havoline Motor Oil 10W-30, 20W-40	Havoline Motor Oil 10W, 20W-40, 30, 40	Marfak All Purpose Grease Marfak Multi Purpose Grease
CHEVRON OIL CO.	RPM Supreme Motor Oil 10W-30, 20W-40	RPM Special Motor Oil 10W, 20W-20, 30, 40	RPM Multi-Motive Grease
CALTEX	Five Star Motor Oil 10W-30, 20W-40	Five Star Motor Oil 10W, 20W-20, 30, 40	Marfak All Purpose Grease Marfak Multi Purpose Grease
MOBIL	Mobiloil Super 10W-40 Mobiloil Special 10W-30	Mobiloil 10W Arctic (20) A (30) AF (40)	Mobil Grease MP
SHELL	Shell Super Motor Oil 10W-40 Shell X-100 10W-30, 20W-40	Shell X-100 20W, 10W, 20, 30, 40	Retinax A
ESSO	Esso Extra Motor Oil 10W-30, 20W-40	Esso Motor Oil 20W-30, 10W, 40	Esso Multi Purpose Grease
BP (British Petroleam)	BP Super Viscostatic Motor Oil 5W-20, 10W-30	BP HD Motor Oil 10W, 20, 30, 40	BP Energrease L2
CASTROL	Castrolite 10W-30 Castrol XL 20W-40 Castrol Super 10W-40, 20W-50	Castrol 5WHD, 10WHD, 20W-20HD 30HD, 40HD	Castrolease LM
Lubricating points	Engine Carburetor Linkage Distributor Shaft		Distributor cam heel

Nissan long life coolant (L.L.C.)

This L. L. C. is an ethylene glycol base product containing chemical inhibitors to protect the cars cooling sytem against rusting and corrosion, L. L. C. does not contain any glycerine, ethyl or methyl alcohol. It will not evaporate or boil away and can be used with either high or low temperature thermostats. If flows freely, transfers heat efficiently, and will not clog the passages in the cooling system.

L. L. C. must not be mixed with other product. This coolant can be used through out the seasons of the year and exchange period is two years or total running mileage of 40, 000 km (24, 000 miles).

Boiling point			
Percent concentration	Sea level	0. 9 kg/cm^2 cooling system pressure	Freeze protection
30%	106° C (221° F)	124° C (255° F)	-15° C (5° F)
50%	109° C (228° F)	127° C (261° F)	-35° C (-31° F)

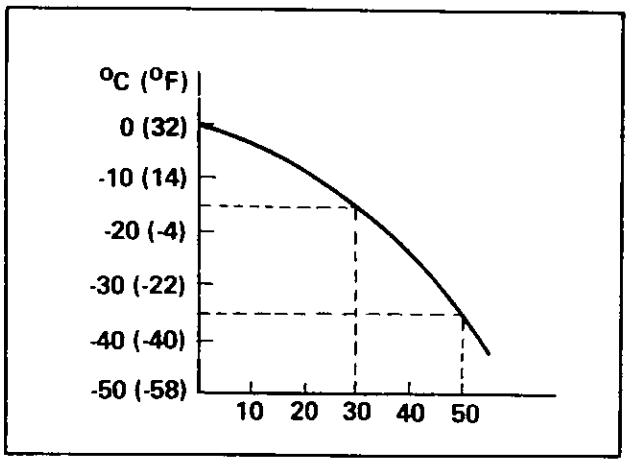

Fig. EF-3 Protection concentration

UNIT SERIAL NUMBER LOCATION

There are two serial numbers for unit identification; the engine number and the chassis number. These numbers are repeated in the car identification plate, which is located in an easy-to-read position.

Engine serial number

The engine number is stamped in the rear left side of cylinder block, at cylinder head contact surface. The number is preceded by engine model.

G18 - 000001
Serial No.
Engine model

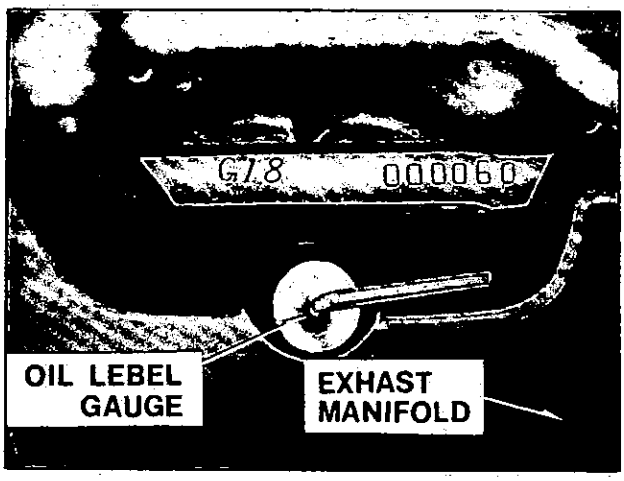

Fig. EG-4 Engine serial and model number

PERIODICAL INSPECTION AND MAINTENANCE

MAINTENANCE FREQUENCY EVERY				LUBRICATION AND CHECKING POINTS (ENGINE)		MAINTENANCE CALENDAR										
40,000 km (24,000 mile)	20,000 km (12,000 mile)	10,000 km (6,000 mile)	5,000 km (3,000 mile)			Daily	1,000 km (600 mile)	3,000 km (2,000 mile)	6,000 km (4,000 mile)	10,000 km (6,000 mile)	15,000 km (9,000 mile)	20,000 km (12,000 mile)	25,000 km (15,000 mile)	30,000 km (18,000 mile)	35,000 km (21,000 mile)	40,000 km (24,000 mile)
					Check engine oil level, top-up if necessary	○										
			○	Engine Oil	Change engine oil		●	●	●	●	●	●	●	●	●	●
		○			Lubricate carburetor linkage					○		○		○		○
		○			Lubricate distributor rotor shaft and arm shaft					○		○		○		○
		○		Grease	Apply grease to distributor cam heel					○		○		○		○
				Fluid	Check cooling water level	○										
		○			Change cooling water					●		●		●		●
○					Change NISSAN LONG LIFE COOLANT											●
					Check battery electrolyte level	○										
					Measure specific gravity of battery electrolyte							○				○
				Check engine starting, color of exhaust gas		○										
		○		Re-tighten cylinder head, manifolds and pipe flange						○		○		○		○
		○		Adjust valve clearance						○		○		○		○
		○		Check ignition timing						○		○		○		○
				Re-tighten carburetor, fitting parts			○									
			○	Check fan belt tension			○		○	○	○	○	○	○	○	○
				Check leak from oil pan		○										
	○			Re-tighten engine mountings			○					○				○
		○		Check fuel strainer				○		○		○		○		
○				Replace fuel strainer												●
				Check fuel leakage		○										
		○		Replace oil filter				●		●		●		●		●
			○	Check spark plugs				○	○	○	○		○	○	○	
	○			Replace spark plugs								●				●
			○	Check distributor cap, rotor and point				○	○	○	○	○	○	○	○	○
			○	Check engine idling				○	○	○	○	○	○	○	○	○
		○		Check air cleaner fittings						○		○		○		○
		○		Clean oil filler cap						○		○		○		○
		○		Check dirt of battery cords and terminals						○		○		○		○
	○			Check alternator, voltage regulator function								○				○
	○			Check starter motor function								○				○
				Replace air cleaner element												●
○				Check fuel pump function												○
○				Measure compression pressure of cylinder												○
○				Clean jets, float chamber of carburetor												○
○				Check condenser of distributor												○
	○			Check crankcase ventilation control valve								○				○

○ = Check or Supply ● = Change

SPECIAL MAINTENANCE FOR EMISSION CONTROL SYSTEM

MAINTENANCE FREQUENCY EVERY					CHECKING POINTS Engines equipped with emission control system	MAINTENANCE PERIODS									
40,000 km (24,000 mile)	20,000 km (12,000 mile)	10,000 km (6,000 mile)	5,000 km (3,000 mile)			1,000 km (600 mile)	3,000 km (2,000 mile)	6,000 km (4,000 mile)	10,000 km (6,000 mile)	15,000 km (9,000 mile)	20,000 km (12,000 mile)	25,000 km (15,000 mile)	30,000 km (18,000 mile)	35,000 km (21,000 mile)	40,000 km (24,000 mile)
			○	Engine	Check ignition timing	○	○	○	○	○	○	○	○	○	○
			○	Engine	Check engine idling	○	○	○	○	○	○	○	○	○	○
	○			Engine	Engine major tune-up						○				○
			○	Engine	Check spark plugs		○	○	○	○		○	○	○	
	●			Engine	Replace spark plugs						●				●
	○			Engine	Check high tension cables						○				○
			○	Engine	Check for fitting and wear of distributor breaker points		○	○	○	○		○	○	○	
	●			Engine	Replace distributor breaker points						●				●
	○			Engine	Apply grease to distributor rotor shaft						○				○
	○			Engine	Apply grease to distributor cam and wick						○				○
○				Engine	Replace carburetor air cleaner element										○
	○			Crank-case emission	Check for leaks of hoses and hose connections						○				○
	○			Crank-case emission	Check for proper function of crankcase ventilation control valve						○				○
	○			Exhaust emission	Check for proper function of air pump						○				○
	○			Exhaust emission	Check for proper function of relief valve						○				○
	○			Exhaust emission	Check for proper function of check valve						○				○
	○			Exhaust emission	Check for proper function of anti-back fire valve						○				○
	○			Exhaust emission	Check for leaks of air gallery and nozzle connections						○				○
	○			Exhaust emission	Check for leaks of hoses and lose connections						○				○
			○	Exhaust emission	Check air pump belt tension	○	○	○	○	○	○	○	○	○	○

AFTER FIRST 1,000 KM (600 MILES)

Changing Engine Oil

Second replacement ..... at 3,000 km (2,000 miles)
Third replacement ..... at 6,000 km (4,000 miles)
Fourth replacement ..... at 10,000 km (6,000 miles)
Thereafter ..... every 5,000 km (3,000 miles)

Draining is best done after a good run, when the oil, being thoroughly warm, will flow readily and freely.

Place a large bowl or other shallow container under the engine. Then remove the oil pan drain plug. Do this carefully, as the oil will be hot and it will spurt out with some force. After completely draining the dirty oil off securely replace the oil drain plug and finally refill the engine in the usual way up to the "F" mark on the dipstick. Make sure the car is on a level surface while draining and filling the engine.

Oil pan capacity ..... 3.8 ℓ (4.0 U.S.qts)
(including oil filter) ..... 4.4 ℓ (4.7 U.S.qts)

AFTER FIRST 3,000 KM (2,000MILES)

Replacing oil filter

Second and thereafter ..... every 10,000 km (6,000 miles)

Remove the body of the oil filter, and the element can be taken off. At the same time, replace the body gasket and center shaft gasket. The tightening torque of center shaft is 2.8 to 3.2 kg-m (20 to 23 ft.lb.).

AFTER FIRST 6,000 KM (4,000 MILES)

Fan belt tension

Second and thereafter ..... every 5,000 km (3,000 miles)

Incidentally, we call it the fan belt, but also it drives the water pump and alternator. It is advisable, however, to check the tension regularly, so that the need for adjustment is not overlooked. With the engine switched off and the bonnet up, push the belt gently downwards. You should be able to depress it about 10 mm (1/2 in.). If the fan belt has become slack through wear loosen the fixing and adjusting bolts, and move the whole of the alternator toward or away from the engine. This will take up the slack. Tighten the bolts again, and recheck to make sure the belt has the required free play. If you tighten it too much it will wear rapidly and also overload the water pump and alternator bearings.

EVERY 10,000 KM (6,000 MILES)

Changing cooling water

Scale or sediment accumulated in water jacket or radiator is obstructive to heat radiation. The system should be thoroughly flushed out opening the two drain plugs, one at the bottom of the radiator and other at the left side of the cylinder block, until clean water comes out.

Always use clean soft water for filling the radiator. Immediately the cold weather arrives, the cooling system should be protected against frost by a good anti-freeze solution such as a NISSAN LONG LIFE COOLANT. To allow for expansion when hot, the level, when cold, should be just visible at the bottom of the filler neck. Do not overfill the system. This coolant (L.L.C.) should be changed every 40,000 km (24,000 miles).

EVERY 40,000 KM (24,000 MILES)

Replacing air cleaner element (wet paper type)

The air cleaner is of a wet paper type element (viscous type). As this element has been performed special treatment, there is no need to clean the element for normal driving condition until it is replaced by new one at 40,000 km (24,000 miles). This element will lock so dirty as to be required dust, but never try to clean, since there is no fear to reduce the cleaning action. Care must be taken not to injure filter element.

SERVICE JOURNAL OR BULLETIN REFERENCE

DATE	JOURNAL or BULLETIN No.	PAGE No.	SUBJECT

DATSUN 1800

SERVICE MANUAL

MODEL G18

ENGINE

NISSAN MOTOR CO., LTD.

TOKYO, JAPAN

SECTION ET

ENGINE TUNE-UP

ET

ENGINE TUNE-UP ET-1

TROUBLE DIAGNOSES AND CORRECTIONS ET-6

ENGINE TUNE-UP

CONTENTS

GENERAL DESCRIPTION ET-1
BASIC PROCEDURE ET-1
Connect tune-up equipment ET-1
Battery inspection ET-2
Spark plugs-remove and recondition ET-2
Clean and adjust distributor points ET-2
Set ignition timing ET-2
Inspection of fan belt ET-3
Inspection of engine oil ET-3
Carburetor overhaul and adjustment ET-4
Valve clearance adjustment ET-4
ADDITIONAL PROCEDURE ET-4
Compression pressure-test each cylinder ET-5
Clean and inspect high tension wires, distributor cap and rotor ET-5
Distributor-lubricate ET-5
Tighten intake manifold and carburetor attaching nuts ET-5
Inspection of oil filter ET-5
Inspection of air cleaner ET-5
Inspection of fuel strainer ET-6
Inspection of cooling system ET-6

GENERAL DESCRIPTION

A minor tune and test consists of testing battery, cleaning, regapping or replacing, if required, spark plugs and distributor points; adjusting distributor dwell angle, ignition timing, carburetor idle mixture, and hot idle speed.

The complete or major tune and test procedure consists of these basic items plus other ignition, compression, electrical and carburetor checks, and a final road test to ensure continued trouble-free operation.

BASIC PROCEDURE

Connect tune-up equipment

Follow manufacturer recommendations for the use of testing equipment. Fig. ET-1 shows a basic schematic for instrumentation which will apply to many types of test equipment and may be used as a rough guide if equipment manufacturer's instructions are not available.

Connections shown in figure ET-1 are made as follows:

1. Voltmeter

(1) Positive lead to resistor side of coil.

(2) Negative lead to ground.

2. Timing light

(1) Positive lead to positive battery terminal.

(2) Negative lead to ground.

(3) Trigger lead to number 1 spark plug.

3. Tachometer

(1) Positive lead to distributor side of coil.

(2) Negative lead to ground.

4. Dwell meter

(1) Positive lead to distributor side of coil.

(2) Negative lead to ground.

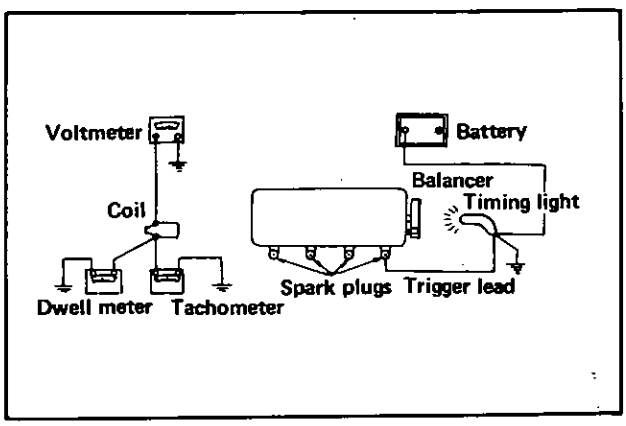

Fig. ET-1 Simple schematic of tune-up instrumentation

Battery inspection

1. Check the level of the electrolyte in battery cells. Check the level line on the case with the battery electrolyte. If necessary, replenish with distilled water.

2. Measure the specific gravity to the battery electrolyte.

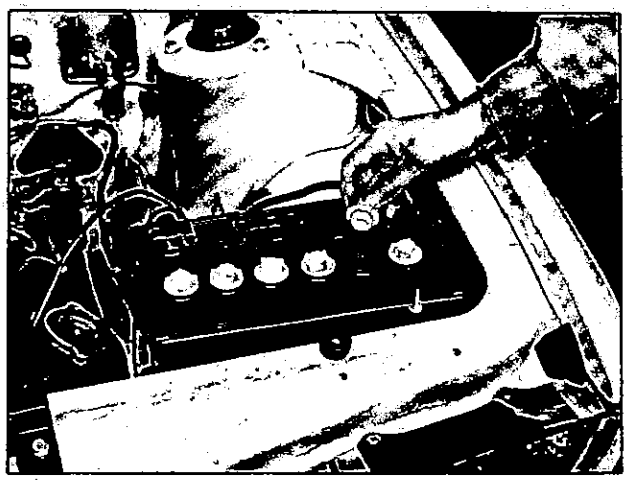

Fig. ET-2 Inspecting battery

Clean top of battery and terminals with a solution of baking soda and water. Rinse off and dry with compressed air. Top of battery must be clean to prevent current leakage between terminals and from positive terminal to hold-down clamp.

In addition to current leakage, prolonged accumulation of acid and dirt on top of battery may cause blistering of the material covering connector straps. After tightening terminals, coat them with petrolatum to protect them from corrosion.

Spark plugs-remove and recondition

See that correct spark plugs are used. Spark plug insulators should be thoroughly cleaned to prevent possible flash-over.
Thoroughly clean lower insulator and cavity by sand blasting. File both electrodes flat (rounded surfaces increase voltage required to fire plugs) and set gap to 0.7 to 0.8 mm (0.028 to 0.031 in.). When plugs are reinstalled, use new gaskets and tighten plugs to 3.0 to 4.0 kg-m (22.0 to 30.0 ft. lb.) torque.

Clean and adjust distributor points

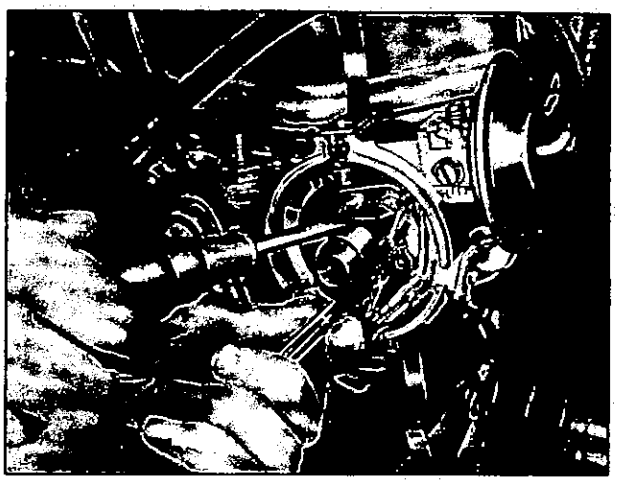

Fig. ET-3 Checking distributor point gap

Remove distributor cap and inspect point for excessive burning or pitting. Replace points if necessary. Use a point file to clean contact area and remove scale from points. Filing is for cleaning purposes only. Do not attempt to remove all roughness. Apply a trace of bearing lubricant to the breaker cam. Adjust distributor dwell angle to 49 to 55 degrees and point gap 0.45 to 0.55 mm (0.0177 to 0.0217 in.).

Set ignition timing

With distributor vacuum line disconnected and car operating at normal idle speed or below, set ignition timing.

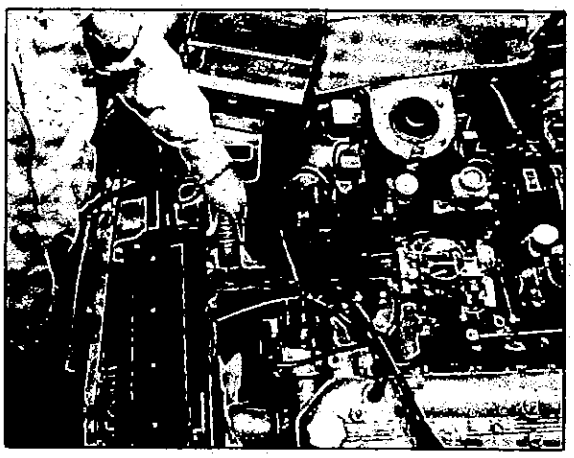

Fig. ET-4 Checking ignition timing check

I = 8° BTDC
T = TDC.
SEE FIG. 5

The timing can be observed by the stationary pointer at the front cover and the markings on the crankshaft pulley with a device called a stroboscopic light (also referred to as a timing light) as shown in Figure ET-4.

Ignition timing is 8° BTDC/600 rpm.

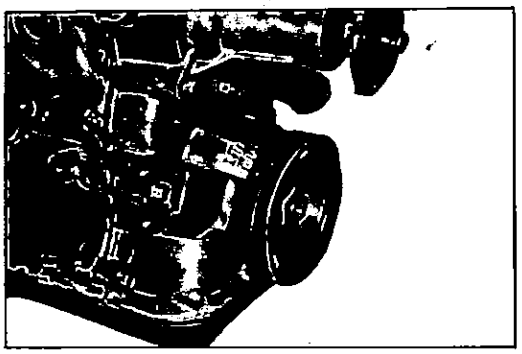

Fig. ET-5 Timing mark

Inspection of fan belt

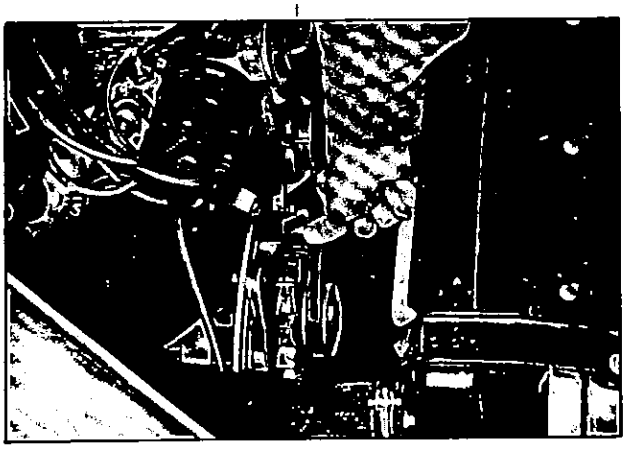

Fig. ET-6 Checking fan belt tension

1. Check for a cracked or damaged V-belt. Replace if defective.

2. Adjust the belt tension, if necessary. Permissible slackness of fan belt: 8 to 12 mm (0.315 to 0.473 in.). Belt tension measuring point: Between fan pulley and alternator pulley.

Inspection of engine oil

Oil capacity of engine

Oil pan capacity ..... 3.8 ℓ (1.0 U.S. gal., 0.8 U.K. gal.)

Engine dried ..... 5.0 ℓ (1.3 U.S. gal., 1.1 U.K. gal.)

1. Check if the engine oil has been deteriorated by invading cooling water or gasoline. Drain and refill the oil, if necessary.

Note: a. A milky oil indicates the presence of cooling water.
Discover the cause for necessary treatment.
b. Oil with extremely low viscosity suggests dilution with gasoline.

2. Check the oil level, and if it is lower than necessary level, replenish oil of the same grade up to the F level.

Fig. ET-7 Checking oil level

Carburetor overhaul and adjustment

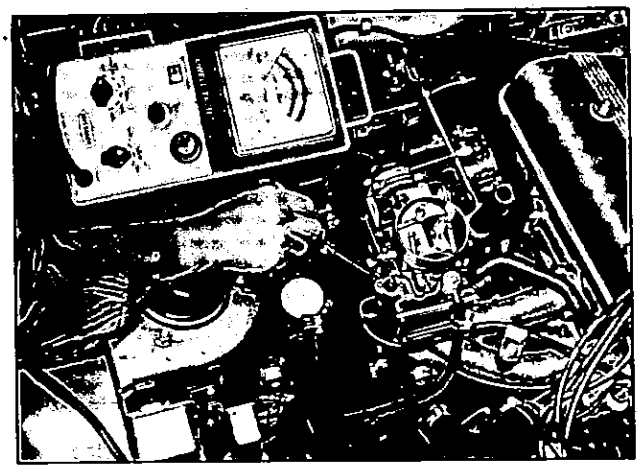

Fig. ET-8 Adjusting idle rpm

Overhaul

The detailed information for carburetor overhauling is outlined in section EF (ENGINE FUEL SYSTEM).

Adjustment

Adjust carburetor to get best idling engine speed 600 rpm.

Valve clearance adjustment

This adjustment is impossible when the engine is in operation. Follow the procedure described below:

1. Standard adjustment is made while the engine is cold. Adjust to the following clearances:

When cold:	Both intake and exhaust, 0.2 mm (0.0079 in.)
When hot: (reference)	Both intake and exhaust, 0.28 mm (0.011 in.)

2. Locate the top dead center (compression) of each cylinder in turn. Loosen the valve screw lock nut and turn the adjusting screw to set valve clearance to the specified value.

Tighten the lock nut and recheck clearance. Follow the same manner for the remaining cylinders.

To rotate the crankshaft of the engine manually, tighten the fan belt and pull.

Inspection of timing chain

Tension of the timing chain is adjusted by turning the adjusting screw attached to the right-hand side of the chain cover by observing following items at running engine.

1. Chain noise is not high at idling rpm.
2. Chain noise is not high at 2,000 rpm.

After adjusting the tensioner, lock it with lock nut securely.

The width across flats of the lock nut is 55 mm (2.16 in.) (same as that of spark plugs). Use the spark plug wrench.

After adjustment at 10,000 km (6,000 miles) when the initial period ends, additional adjustment is not necessary until 100,000 km (60,000 miles) is reached.

ADDITIONAL PROCEDURE

For diagnoses purposes, it is sometimes necessary to proceed further than the basic tune-up procedure. The following steps plus a road test are included in a complete or major tune and test procedure.

Compression pressure-test each cylinder

Note: If this test is to be performed, it should be done when plugs are removed for service during basic tune-up procedure.

Unless checking for worn rings or for the cause of low speed miss, compression check should not be necessary.

Test compression with engine warm, all spark plugs removed and throttle and choke open. No cylinder should be less than 80 % of the highest cylinder. Excessive variation between cylinders, accompanied by low speed missing of the cylinder or cylinders which are low, usually indicates a valve not properly seating of a broken piston ring. Low pressures, even though uniform, may indicate worn rings. This may be accompanied by excessive oil consumption.

Compression pressure
11.3 kg/cm (156.8 in/oz.) to
12.3 kg/cm (170.8 in/oz.) at 350 rpm

Clean and inspect high tension wires, distributor cap and rotor

Note: This operation is to be performed while checking distributor points during the basic tune-up procedure. Inspect distributor cap for cracks and flash over.

External surfaces of all parts of secondary system must be cleaned to reduce possibility of voltage loss. All wires should be removed from distributor cap and coil so that terminals can be inspected and cleaned. Burned or corroded terminals indicate that wires were not fully seated, which caused arcing between end of wire and terminal. When replacing wires in terminal, be sure they are fully seated before pushing rubber nipple down over tower. Check distributor rotor for damage, and distributor can for cracks.

Distributor-lubricate

Wipe a very small amount of special cam and ball bearing lubricant on cam lobes when servicing.

Tighten intake manifold and carburetor attaching nuts

Intake manifold attaching bolts and nuts on engines should be tightened to proper torque. Carburetor attaching nuts should be tightened securely. Leaks at these areas can cause rough idle, surging, deceleration popping or deceleration whistle.

Inspection of oil filter

1. Check for oil leaks at oil filter body gasket, center shaft gasket and installing surface of cover. If oil leaks are found, tighten it a little, after that the oil leaks can not be protected, replace each gaskets and tighten each bolts under the prescribed torque. 2.8 to 3.2 kg-m (20.3 to 23.2 lb. ft.).

2. Replace oil filter element each 10,000 km (6,000 miles) running.

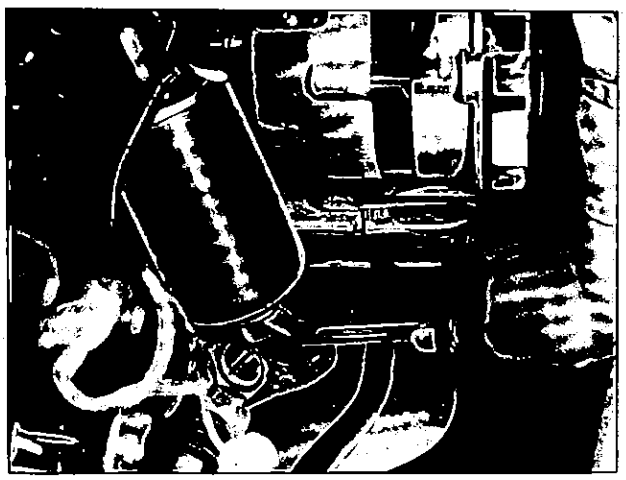

Fig. ET-9 Removing oil filter

Inspection of air cleaner

Viscous type element makes cleaning unnecessary until the engine used for two years, or for 40,000 km (24,000 miles) running (under normal conditions).

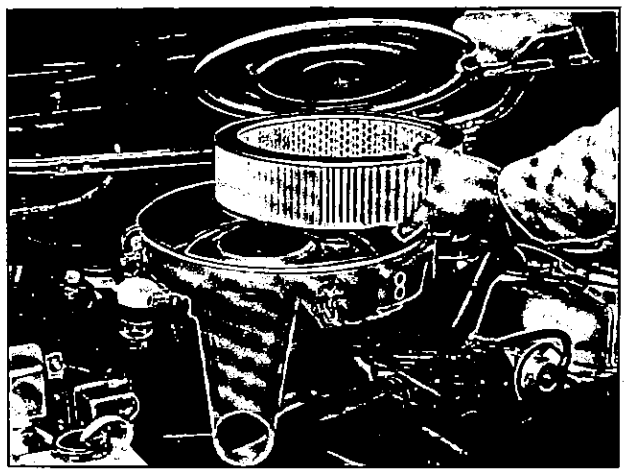

Fig. ET-10 Removing air cleaner element

Inspection of fuel strainer

This engine uses a cartridge type strainer, so if the malfunction is detected, replace as an assembly.

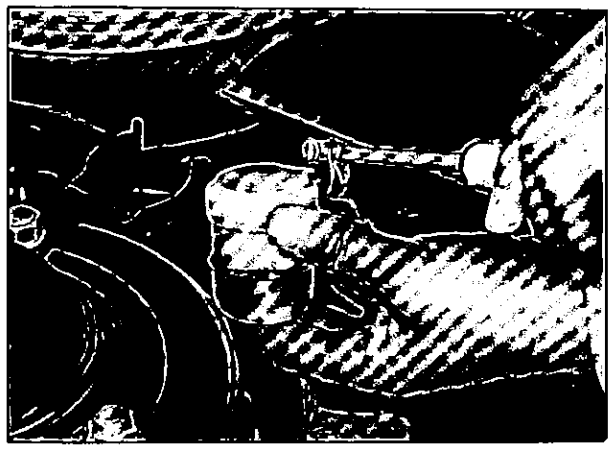

Fig. ET-11 Removing fuel strainer

Inspection of cooling system

Inspection of radiator cap

Apply reference pressure 0.9 kg/cm^2 (12.7 lb/in^2) to the radiator cap and the reservoir tank cap by means of a cap tester to see if it is satisfactory. Replace the cap assembly if necessary.

Fig. ET-12 Radiator cap test

Cooling system pressure test

With radiator cap removed, apply reference pressure 0.9 kg/cm^2 (12.7 lb/in^2) to the cooling system by means of a tester to check for leakes at system component.

TROUBLE DIAGNOSES AND CORRECTIONS

Troubles	Possible causes	Remedies
CANNOT CRANK ENGINE OR SLOW CRANKING	Improper grade oil.	Replace with proper grade oil.
	Discharged battery.	Charge battery.
	Defective battery.	Replace.
	Loosen fan belt.	Adjust.
	Trouble in charge system.	Inspect charge system.
	Wiring connection trouble in starting circuit.	Correct.
	Defective starter switch.	Repair or replace.
	Defective starter motor.	Repair or replace.

(Trouble shooting procedure on starting circuit).

Switch on the starting motor with light put on.

When light goes off or dims considerably.

a. Check battery.

b. Check connection and cable.

c. Check starter motor.

When light stays bright.

a. Check wiring connection between battery and starter motor.

b. Check starter switch.

c. Check starter motor.

ENGINE WILL CRANK NORMALLY BUT WILL NOT START

In this case, following trouble cause may exist, but in many causes ignition system or fuel system is in trouble.

Ignition system in trouble.
Fuel system in trouble.
Valve mechanism does not work properly.
Low compression.

Check spark plug firstly by following procedure.
Disconnect high tension cable from one spark plug and hold it about 10 mm (0.3937 in.) from the engine metal part and crank the engine.

Good spark occurs.
a. Check spark plug.
b. Check ignition timing.
c. Check fuel system.
d. Check cylinder compression.

No spark occurs. — Check the current flow in primary circuit.

Very high current. — Inspect primary circuit for short. Check breaker point operation.

Low or no current. — Check for loose terminal or disconnection in primary circuit. Check for burned points.

Ignition system in trouble	Distributor point burned.	Repair or replace.
	Improper point gap.	Adjust.
	Defective condenser.	Replace.
	Rotor cap and rotor leak.	Replace.
	Defective spark plug.	Clean, adjust plug gap or replace.
	Improper ignition timing.	Adjust.
	Defective ignition coil.	Replace.
	Disconnection of high tension cable.	Replace.
	Loose connection or disconnection in primary circuit.	Repair or replace.
Fuel system in trouble	Lack of fuel.	Supply.
	Dirty fuel strainer.	Clean or replace.
	Dirty or clogged fuel pipe.	Clean.
	Fuel pump will not work properly.	Repair or replace.

	Adjustment of float level no good.	Correct.
	Improper idling.	Adjust.
	Dirty or clogged carburetor.	Disassemble and clean.
	Clogged breather pipe.	Clean.
Low compression	Incorrect spark plug. tightening, defective gasket.	Tighten to normal torque, replace gasket.
	Improper grade engine oil or viscosity dropping.	Replace with proper grade oil.
	Incorrect valve clearance.	Adjust.
	Compression leak from valve seat.	Remove cylinder head and lap the valves.
	Stick valve stem	Correct or replace valve.
	Weak or defective valve springs.	Replace valve springs.
	Compression leak at cylinder head gasket.	Replace gasket.
	Piston ring sticking or defective.	Replace piston rings.
	Worn piston ring or cylinder.	Overhaul engine.
	(Trouble shooting procedure). Pour the engine oil from plug hole, and then measure cylinder compression.	
	Compression increased.	Trouble in cylinder or piston ring.
	Compression unchanged.	Compression leak from valve, cylinder head or head gasket.
IMPROPER ENGINE IDLING		
Fuel system in trouble	Clogged or damaged carburetor jets.	Clean or replace.
	Incorrect idle adjustment.	Adjust.
	Clogged air cleaner.	Replace element.
	Defective gaskets of manifolds or carburetor insulator.	Replace gasket.
	Adjustment of float level no good.	Adjust.
Low compression		Previously mentioned.
Others	Incorrect valve clearance.	Adjust.
	Extremely low revolution.	Adjust.

ENGINE POWER NOT UP TO NORMAL		
Low compression		Previously mentioned.
Ignition system in trouble	Incorrect ignition timing.	Adjust.
	Defective spark plugs.	Clean, adjust or replace plugs.
	Defective distributor points.	Dress, or replace points also check condenser.
	Incorrect octane selector setting.	Adjust octane selector.
Fuel system in trouble	Malfunction of choke system.	Adjust.
	Clogged fuel pipe.	Clean.
	Dirty or clogged fuel strainer.	Replace.
	Fuel pump will not work properly.	Repair or replace.
	Clogged carburetor jets.	Disassemble and clean.
Air intake system in trouble	Clogged air cleaner.	Replace element.
	Air inhaling from manifold gasket or carburetor gasket.	Replace gasket.
Overheating	Insufficient coolant.	Replenish.
	Loosen fan belt.	Adjust fan belt.
	Worn or defective fan belt.	Replace.
	Defective thermostat.	Replace.
	Defective water pump.	Replace.
	Clogged or leaky radiator.	Flush, repair or replace.
	Defective radiator filler cap.	Replace.
	Air mixing into cooling system.	Retighten each part of cooling system.
	Improper grade engine oil.	Replace with proper grade oil.
	Incorrect ignition timing.	Adjust.
	Defective carburetor (lean mixture).	Overhaul carburetor.
Overcooling	Defective thermostat.	Replace.
Others	Low octane fuel.	Replace with specified octane fuel.
	Improper tire pressure.	Make specified pressure.

	Dragging brake.	Adjust.
	Clutch slipping.	Adjust.
NOISY ENGINE		
Car knocking	Overloading to engine.	Use right gear in driving.
	Carbon knocking.	Disassemble cylinder head and remove carbon.
	Timing knocking.	Adjust ignition timing.
	Fuel knocking.	Use specified octane fuel.
	Preignition (misusing of spark plug).	Use specified spark plug.
Mechanical knocking		
Crankshaft bearing knocking	This strong dull noise increases when the engine is accelerated. To locate the place, cause a misfire on each cylinder. If the noise stops by the misfire, this cylinder generates the noise.	This is caused by the worn or damaged bearings, or unevenly worn crankshaft. Renew the bearings and adjust or change the crankshaft. Check the lubrication system.
Connecting rod bearing knocking	This is a little higher-pitched noise than the crankshaft knocking, and also increases when the engine is accelerated. Cause a misfire on each cylinder and if the noise deminishes almost completely this crankshaft bearing generates the noise.	Same as the case of crankshaft bearings.
Piston and cylinder noise	When you hear an overlapping metalic noise which increases its magnitude with the revolution of the engine and which decreases as the engine is warmed up, this noise is caused by the piston and cylinder. To locate the place, cause a misfire on each cylinder.	This may cause an abnormal wearing of the cylinder and lower compression which in turn will cause a lower out-put power and excessive consumption of oil. Overhaul the engine.
Piston pin noise.	This noise is heard at each highest and lowest dead end of the piston. To locate the place, cause a misfire on each cylinder.	This may cause a wear on the piston pin, or piston pin hole. Renew the piston and piston pin assembly.

Water pump noise.	This noise may be caused by the worn or damaged bearings, or by the uneven surface of sliding parts.	Replace the water pump with a new one.
Others.	An improper adjustment of the valve clearance.	Adjust.
	Noise of the timing chain.	Adjust the tension of the chain.
	An excessive end-play on the crankshaft. Remarks: Disengage the clutch slightly and this noise will stop.	Dismantle the engine and renew the main bearing bush.
	Wear on the clutch pilot bush. Remarks: This noise will be heard when the clutch is disengaged.	Renew the bush and adjust the drive shaft.
ABNORMAL COMBUSTION (back fire, after fire, run-on etc.)		
Improper ignition timing	Improper ignition timing.	Adjust the ignition timing.
	Improper heat range of the spark plugs.	Use specified spark plugs.
Fuel system in trouble	Damaged carburetor or manifold gasket. (back fire, after fire)	Replace them with new parts.
	Defective carburetor jet.	Dismantle the carburetor and check it.
	Improper function of the float.	Adjust the level, and check the needle valve.
	Uneven idling.	Adjust.
Defective cylinder head, etc.	Improperly adjusted valve clearance.	Adjust it.
	Excess carbon in the combustion chamber.	Remove the head and get rid of the carbon.
	Damaged valve spring (back fire, after fire).	Replace it with a new one.
EXCESSIVE OIL CONSUMPTION		
Oil leakage	Loose oil drain plug.	Tighten it.
	Loose or damaged oil pan gasket.	Renew the gasket or tighten it.
	Loose or damaged chain cover gasket.	Renew the gasket or tighten it.

	Defective oil seal in front and rear of the crankshaft.	Renew the oil seal.
	Loose or damaged locker cover gasket.	Renew the gasket or tighten it (but not too much).
	Improper tightening of oil filter.	Renew the gasket and tighten it with the proper torque.
	Loose or damaged oil pressure switch.	Renew the oil pressure switch or tighten it.
Excessive oil consumption	Cylinder and piston wear.	Overhaul the cylinder and renew the piston.
	Improper location of the ring split or reversed assembly of it.	Remount the piston rings.
	Damage or seizure of rings.	Renew the rings.
		Repair or renew the piston and cylinder.
	Wear of piston ring groove and rings.	Renew the piston and piston ring.
	Fatigue of valve oil seal lip.	Replace the seal lip with a new one.
	Wear of valve stem.	Renew the valve or the guide.
Others	In adequate quality of engine oil.	Use the designated oil.
	Engine overheat.	Previously mentioned.
POOR FUEL ECONOMY		
See the explanation of the power decrease		
Others	Exceeding idling revolution.	Adjust it to the designated rpm.
	Defective acceleration recovery.	Adjust it.
	Fuel leakage.	Repair or tighten the connection of fuel pipes.
TROUBLE IN OTHER FUNCTIONS		
Decreased oil pressure	Inadequate oil quality.	Use the designated oil.
	Overheat.	Previously mentioned.
	Defective function of oil pump regulator valve.	Dismantle the oil pump and repair or renew it.

	Functional deterioration of oil pump.	Repair or replace it with new one.
	Blocked oil filter.	Renew it.
	Increased clearance in various sliding parts.	Dismantle and replace the worn parts with new ones.
	Blocked oil strainer.	Clean it.
	Trouble in the oil gauge pressure switch.	Replace it with a new one.
Excessive wear on the sliding parts	Oil pressure decrease.	Previously mentioned.
	Defective quality or contamination of oil.	Exchange the oil with proper one and change the element.
	Defective air cleaner.	Change the element.
	Overheat or overcool.	Previously mentioned.
	Improper fuel mixture. (Principally to cylinder walls)	Check the fuel system.
Seizure of sliding parts	Decrease of oil pressure.	Previously mentioned.
	Too small clearances.	Reassemble with the designated clearances.
	Overheat.	Previously mentioned.
	Improper fuel mixture.	Check the fuel system.

SERVICE JOURNAL OR BULLETIN REFERENCE

DATE	JOURNAL or BULLETIN No.	PAGE No.	SUBJECT

SERVICE JOURNAL OR BULLETIN REFERENCE

DATE	JOURNAL or BULLETIN No.	PAGE No.	SUBJECT

DATSUN 1800

SERVICE MANUAL

MODEL G18

ENGINE

NISSAN MOTOR CO., LTD.

TOKYO, JAPAN

SECTION EM

ENGINE MECHANICAL

EM

GENERAL DESCRIPTION ····· EM -1
ENGINE DISASSEMBLY ····· EM -5
INSPECTION AND REPAIR ····· EM -8
ENGINE ASSEMBLY ····· EM-22
SERVICE DATA AND SPECIFICATIONS ····· EM-31
TROUBLE DIAGNOSES AND CORRECTIONS ·· EM-36

GENERAL DESCRIPTION

CONTENTS

G18 ENGINE EM-1
CYLINDER BLOCK EM-2
CRANKSHAFT EM-2
PISTONS AND CONNECTING RODS EM-2
CYLINDER HEAD EM-3
CAMSHAFT EM-3
VALVES AND VALVE ROCKER ARMS EM-3
CAMSHAFT DRIVE SYSTEM EM-4
MANIFOLDS EM-4

G18 ENGINE

The G18 engine is a short stroke [bore × stroke = 85 × 80 mm (3. 346 × 3. 150 in.)] powerhouse with 1, 815 c. c. (110.8 c. i.) displacement and its maximum output is 105HP at 5, 600 rpm (SAE). From low to high speeds, this engine exhibits excellement performance made possible by adoption of new mechanisms, such as an aluminum alloy cylinder head which has cross-flow ports and a V-shaped valve layout, a single overhead camshaft, and five-journal crankshaft.

It is sufficiently durable at high continuous speeds, and maintenance and inspection operations are easily performed. Gasoline with a standard octane value of 88 is used.

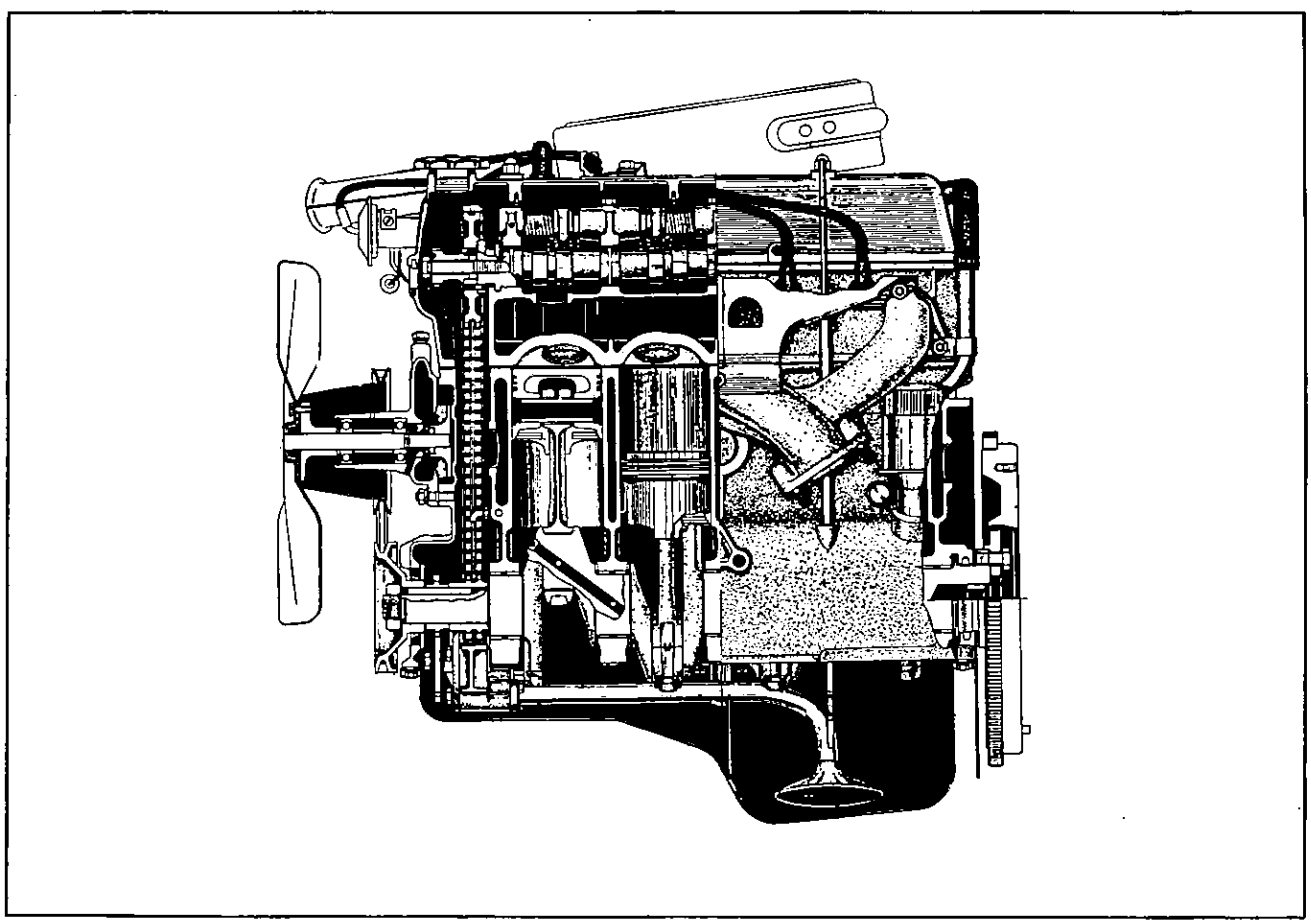

Fig. EM-1 Sectional view of G18 engine

CYLINDER BLOCK

The cylinder block is a special monoblock casting with deep skirts and five bearing-support system. Rigidity is high and resistance to wear excellent. Coolant is forced through the space between cylinders to maintain uniform cylinder block temperature. The passage for oil from the cylinder head is located at the rear portion.

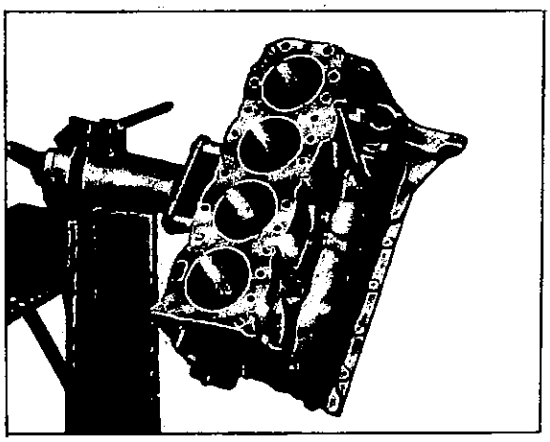

Fig. EM-2 Cylinder block

CRANKSHAFT

The crankshaft is a carbon steel forging and is provided with five bearing journals and four balancing weights. As a result, it possesses high rigidity and there is little vibration. The surfaces of the main journals are hardened by high-frequency induction, improving the resistance to wear. Highly durable three-layer kelmet metal is used for main bearings. The thrust bearings, made of aluminum, are located on journal #2. Oil sealing at the front end is accomplished by a lip-type oil seal made of highly durable acryl rubber and a flinger, and at the rear end by means of a graphite jute oil seal.

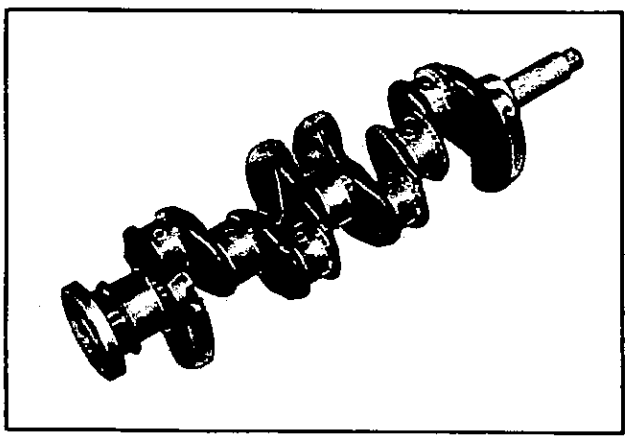

Fig. EM-3 Crankshaft

PISTONS AND CONNECTING RODS

The piston, made of a cast aluminum alloy, is oval in shape with cross slits. The piston crown is flat surfaced except for the cutout for valves. The piston pin is made of special steel and carburizing heat treatment is applied. A "full floating" system is used for fitting the connecting rod to the piston and a circlip is used at each end to limit the travel of the piston pin.

There are two compression rings and one oil ring. The compression ring has a tapered face and the entire surface is plated with hard chrome to improve the resistance to wear. The oil ring is equipped with a coil expander which boosts tension and functions to block the down-flow of oil during high-speed operation.

The connecting rods are made of forged carbon steel, and the "I" cross section provides ample strength. To insure good balancing during operation, weight adjusting bosses are located at both the large and small ends.

Bearings are made of three-layer kelmet metal, and bushings of lead-bronze with steel backing.

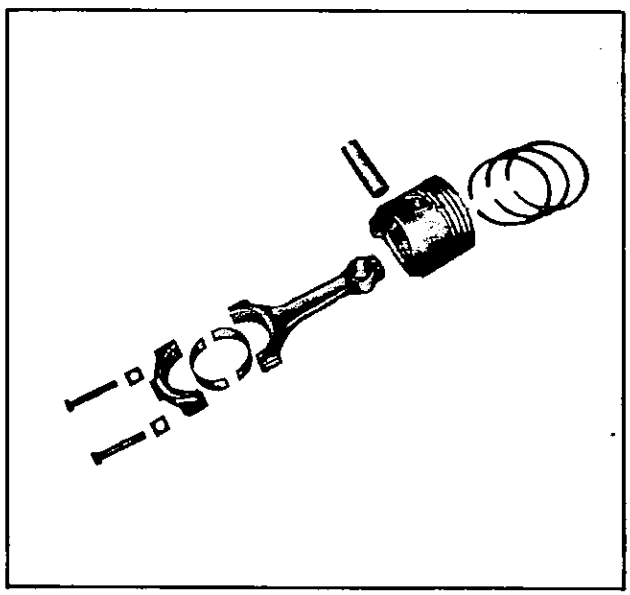

Fig. EM-4 Piston and connecting rod

CYLINDER HEAD

The die-cast aluminum alloy cylinder head produces good cooling effects, and results in lightweight and excellent strength qualities and smooth combustion chamber surfaces.

Valve layout is V-shaped and symmetrical for intake and exhaust. Cross flow ports are used to obtain good intake and exhaust efficiency. Valve seats are cast into the cylinder head and special iron is used for intake valve seats and #13 chrome steel for exhaust valve seats. Both cylinder head and cap surfaces are used for camshaft bearings without modification.

The cylinder head gasket is made of asbestos which contains a steel net, and is protected by a stainless steel grommet, giving excellent gas sealing effects.

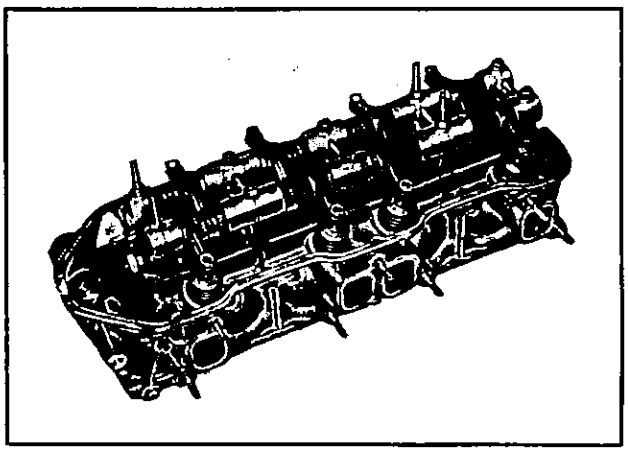

Fig. EM-5 Cylinder head

CAMSHAFT

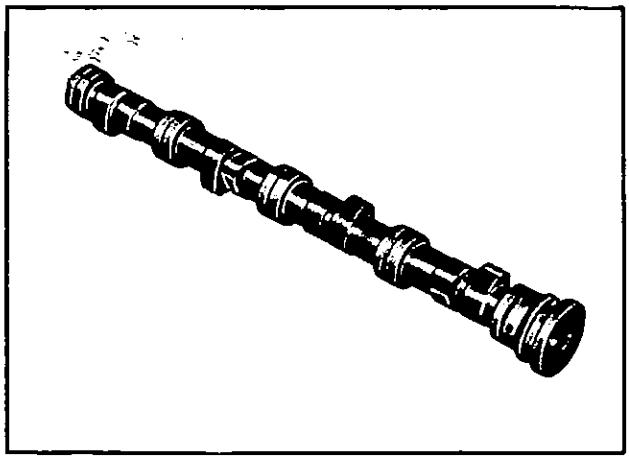

Fig. EM-6 Camshaft

The camshaft is a special alloy casting which has excellent resistance to wear. Lobes are chill hardened and lubrite processing applied to obtain good operation between the rocker arm and camshaft. Five journals are employed and they receive the thrust by the front flange and cylinder head groove. Bolts with left-hand threads are used to attach a sprocket and the distributor drive gear to the end of the camshaft.

VALVES AND VALVE ROCKER ARMS

A rocker arm shaft is located on each side of the camshaft. Intake and exhaust valves are made of heat-resistant steel. Special heat-resistant steel is used for the head of exhaust valves and stellite is used for the valve seats, improving the resistance to wear at high engine temperature and speed. A dual valve spring system is used to elevate the characteristic frequency of the springs and insure the opening and closing of valves at high speed. The valve oil seal ring located at the top of the valve guide blocks the downflow of oil. The rocker arms are made from special forged steel. To improve resistance to wear, toughtelite processing is applied to cam contact surfaces after carburizing heat treatment. Lubrication is accomplished by oil ejected from the jet in the stem of the rocker arm.

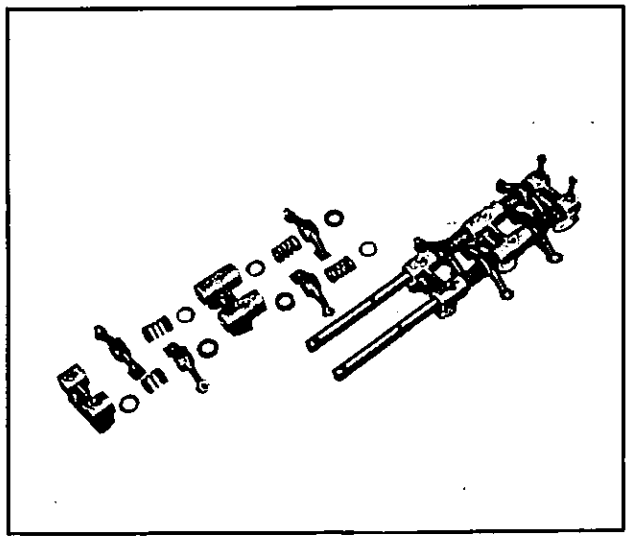

Fig. EM-7 Rocker arm

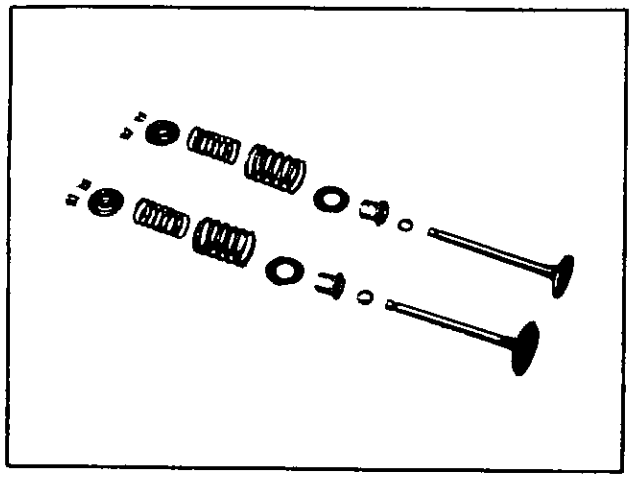

Fig. EM-8 Valve

CAMSHAFT DRIVE SYSTEM

The camshaft is driven from the crankshaft by a double-row endless roller chain, at a reduction ratio of 2 : 1. Chain tension adjustment is accomplished from the outside, by means of the adjusting screw attached to the chain cover. A chain stop is located on the chain tensioning end and serves to eliminate vibration. The oil jet at the top part of the crank sprocket provides active lubrication, holding chain elongation and sprocket wear to a minimum.

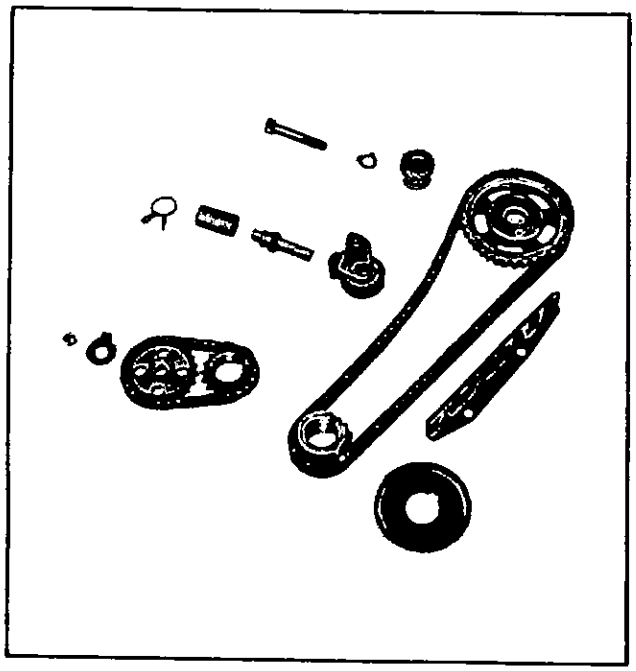

Fig. EM-9 Camshaft drive system

MANIFOLDS

The intake manifold is made of aluminum alloy and is located on the right side of the engine. Coolant from the rear of the cylinder head passes through the riser portion of the intake manifold, heating this portion and is returned to the water pump.

The exhaust manifold is made of cast iron. No. 1/No. 4 and No. 2/No. 3 cylinders are grouped together. The semi-duel system which combines exhaust gas flow at the point of exhaust pipe connection produces good exhausting efficiency.

An oiled sheet is used for the intake gasket. and steel-filled asbestos for the exhaust gasket.

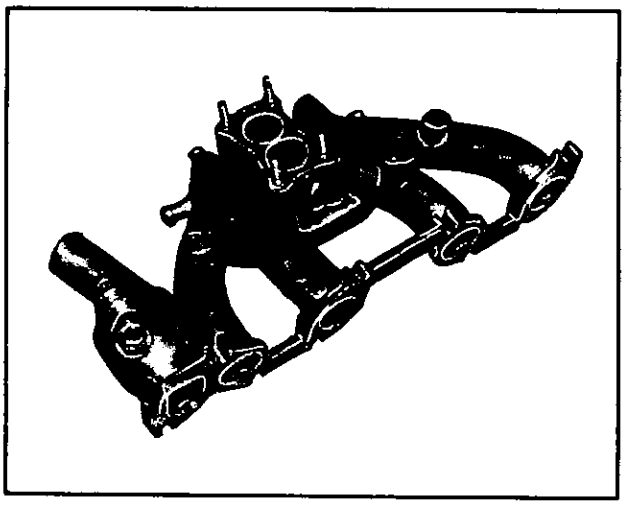

Fig. EM-10 Intake manifold

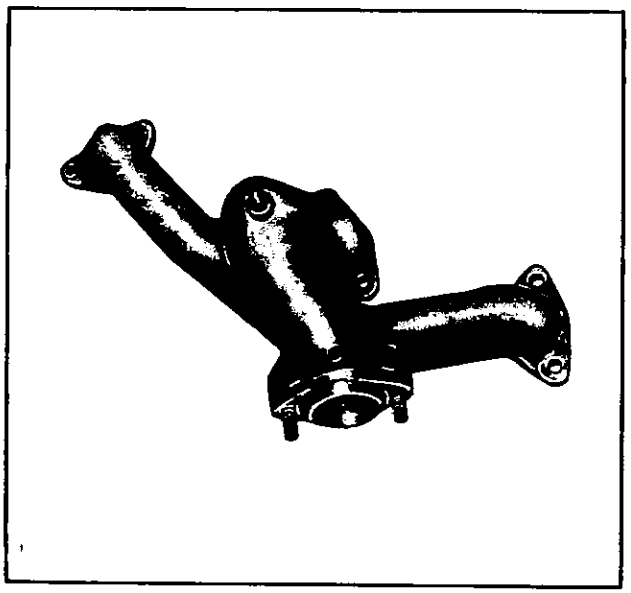

Fig. EM-11 Exhaust manifold

ENGINE DISASSEMBLY

CONTENTS

CLEANING AND INSPECTING EM-5
DISASSEMBLY EM-5
Disassembly of piston and connecting rod assembly EM-7
Disassembly of cylinder head assembly EM-7

CLEANING AND INSPECTING

Wash the engine thoroughly before disassembly. Before washing, remove the alternator, distributor and starter, and plug up the carburetor air-horn to avoid any infiltration of foreign matter.

1. The exterior of the engine: Check the covers and bolts for breakage, rust, damage and loss.

2. Cylinder block: Check thoroughly the water jacket for cracks and breakage.

3. Clutch housing: Check for cracks.

4. Oil pan: Check for excessive rust.

DISASSEMBLY

The engine with transmission is placed on the engine carrier (ST49770000) now.
The disassembly procedure begins from this condition.

1. Remove the transmission.

2. Disconnect the intake manifold water hose, the vacuum hose and intake manifold to oil separator hose.

3. Remove intake manifold with carburetor.

4. Install the engine attachment (ST37200G18) to the cylinder block.

5. Place the engine on the engine stand (ST371 00000).

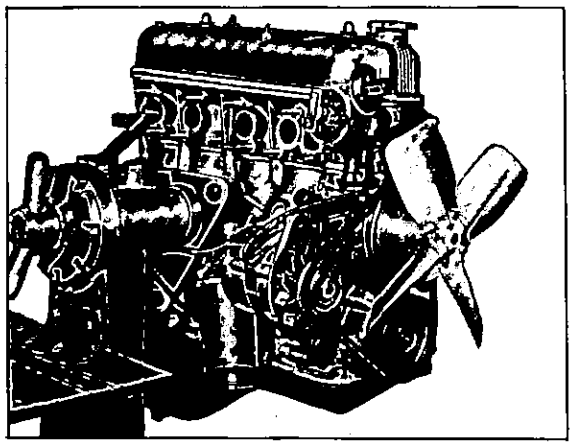

Fig. EM-12 Placing engine on the engine stand

6. Remove the clutch.

7. Remove the exhaust manifold and heat baffle plate.

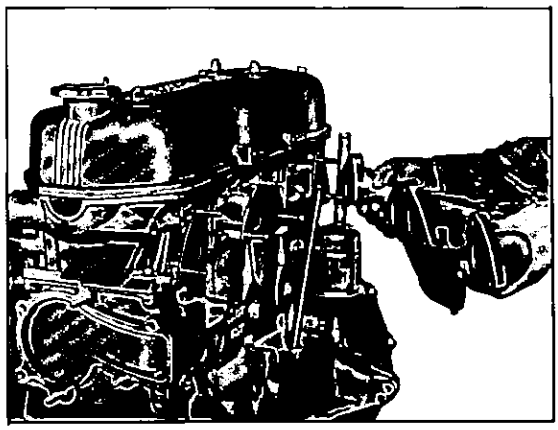

Fig. EM-13 Removing exhaust manifold

8. Remove the fan blades. At the same time, remove the water pump pulley and fan belt.

9. Remove the rocker cover hose, manifold heat hose and bypass hoses.

10. Remove the generator bracket and oil filter.

11. Remove the breather assembly by extracting upward from above. The breather is fitted to the guide (with O-ring pressed into the cylinder block.

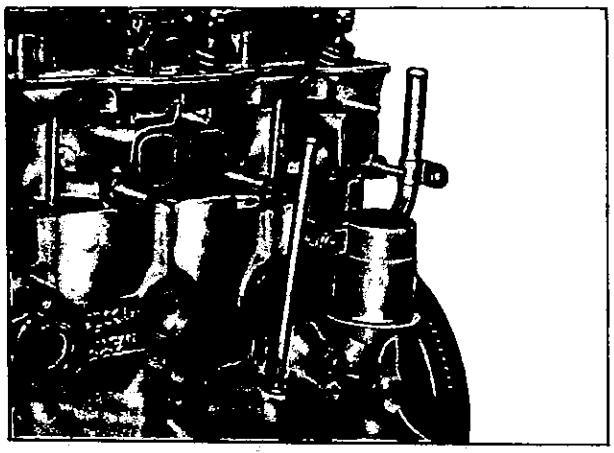

Fig. EM-14 Breather assembly

12. Remove the water pump. The generator adjusting arm is removed at the same time.

13. Flatten the lock washer and unscrew the nut, and then pull out the crank pulley.

Note: When the crank pulley cannot be easily removed, use a puller. (ST44820000).
Do not fit the puller so that it hooks in the V-groove.

14. Remove the rocker cover.

15. Remove the rubber plug located on the front portion of the cylinder head. Straighten the locking washer of the camshaft bolt fixing the distributor drive gear and camshaft sprocket to the camshaft and remove the bolt. After removing the distributor drive gear take off the sprocket from the camshaft.

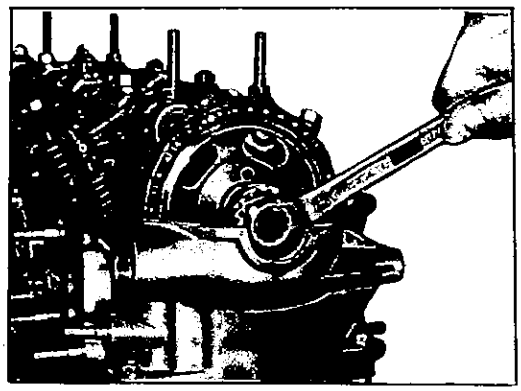

Fig. EM-15 Removing camshaft sprocket

Note: Mounting bolts have left-hand threads.

16. Remove the cylinder head as an assembly.

Note: In addition to ten cylinder head bolts, there are two 6 mm (0.2362 in.) bolts fixing the chain cover to the cylinder head.

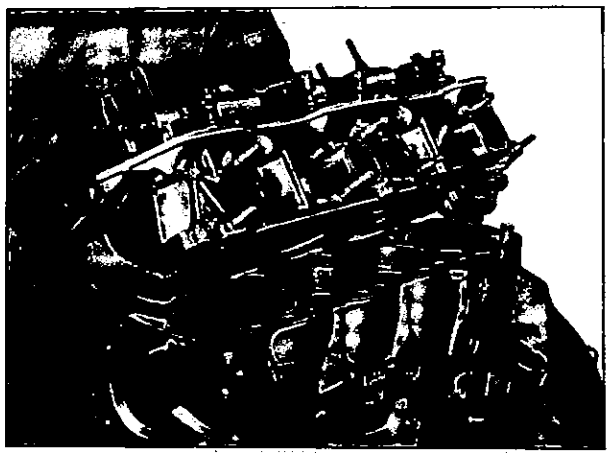

Fig. EM-16 Removing cylinder head

17. Turn the engine upside-down and remove the oil pan.

18. Remove the chain cover and remove the oil flinger.

19. Remove the nut which holds the oil pump sprocket in place. Pull out this sprocket, with the chain in place on the crankshaft oil pump sprocket.

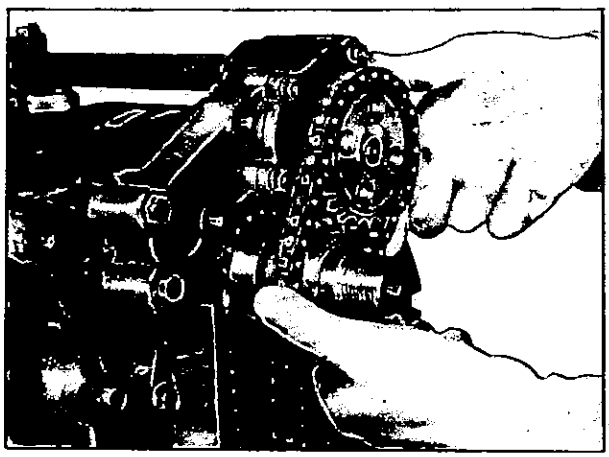

Fig. EM-17 Removing oil pump sprocket

20. Remove the oil pump without together with removing the strainer.

Note: Two of the oil pump mounting bolt are pipe guides.

21. Remove the timing chain.

22. Remove the crankshaft sprocket.

23. Remove the chain tensioner and chain stop.

24. Remove piston and connecting rod assemblies.

Note: Keep the parts for cylinder arrangement to avoid the possibility of confusion when reinstalling.

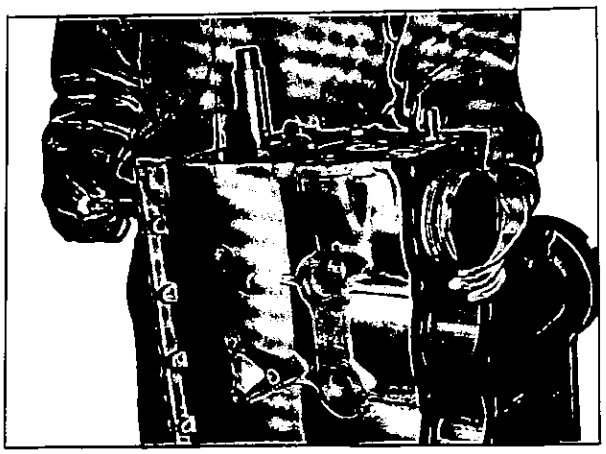

Fig. EM-18 Removing piston assembly

25. Remove the flywheel.

26. Remove bearing caps.

Note: Do not hurt or damage the pipe guides since positioning is accomplished by them.

27. Remove the crankshaft and detach the main bearings.

Note: Make sure that bearings are grouped to preserve the original order.

Disassembly of piston and connecting rod assembly

1. Remove the piston rings.
2. Remove the piston pin clips.
3. Pull out the piston pin.

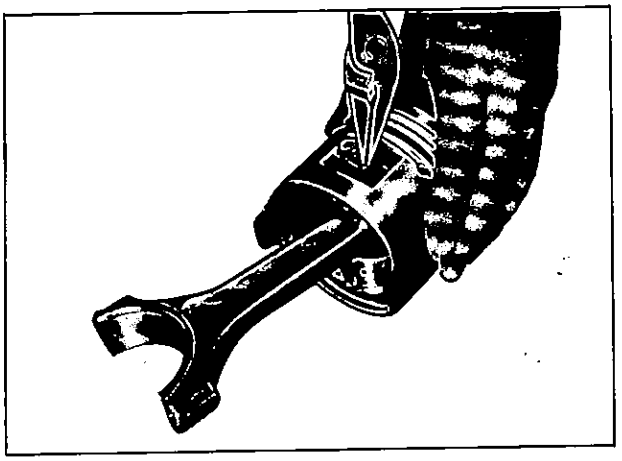

Fig. EM-19 Removing piston pin

Heat the piston to 50 to 60° C (122 to 140° F) before extracting the piston pin.

Note: Make sure that disassembled parts are grouped together, to preserve the original order.

Disassembly of cylinder assembly

1. Remove the camshaft, rocker arm shafts, and rocker arm assemblies from the cylinder head by removing cam bracket clamping nuts.

Note: Disused bolts should be inserted in the No. 1 and No. 5 bracket holes since the cam bracket will fall from the rocker arm shaft when it is removed.

2. Remove the camshaft.

3. Remove the cotters by using the special tool (ST47450000), and disassemble valves, springs, and retainers.

Note: Make sure that disassemble parts are grouped together, to preserve the original order.

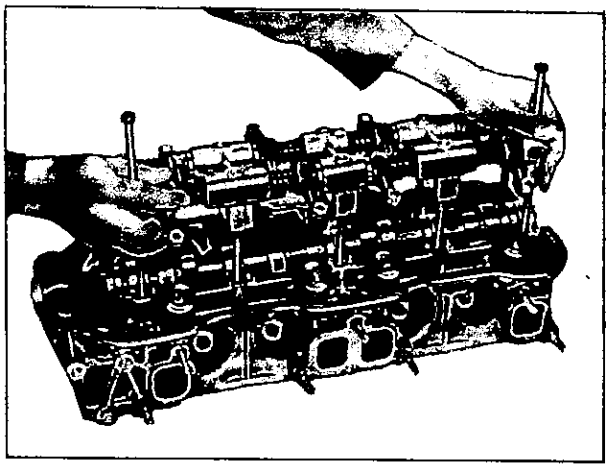

Fig. EM-20 Removing rocker assembly

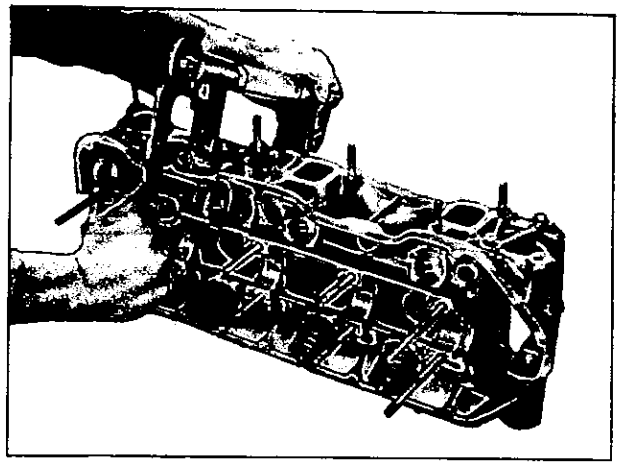

Fig. EM-21 Removing valve spring

INSPECTION AND REPAIR

CONTENTS

PREPARATION FOR INSPECTION ..... EM- 8
CYLINDER HEAD AND VALVES ..... EM- 8
Checking head mating face ..... EM- 8
Valve assembly ..... EM- 9
Valve springs ..... EM- 9
Rocker arm and valve rocker pivot EM-10
Valve guide EM-10
Valve seat insert EM-12
CAMSHAFT AND CAMSHAFT BEARINGS .. EM-12
Camshaft bearing clearance check EM-12
Valve timing check EM-13
Camshaft alignment check..... EM-13
CYLINDER BLOCK EM-14
How to measure cylinder bore EM-14
Boring of cylinder EM-14
PISTON, PISTON PIN AND PISTON RING EM-15
CONNECTING ROD EM-17
CRANKSHAFT EM-17
BUSHING AND BEARINGS EM-19
Measurement of main bearing clearance EM-19
Measurement of connecting rod bearing clearance..... EM-19
Fitting bearings EM-20
MISCELLANEOUS COMPONENTS EM-21
Crankshaft sprocket, camshaft sprocket EM-21
Chain tensioner and chain guide EM-21
Flywheel EM-21

PREPARATION FOR INSPECTION

1. Check the cylinder head and the cylinder block for traces of water leaks before cleaning.

2. Wash all the parts to clean them completely of oil strains, carbon deposits, fur and sealing material.

3. Ascertain if all the oil holes are clear by blowing air into them.

4. Use every caustion to secure proper assembly.

CYLINDER HEAD AND VALVES

Checking head mating face

1. Make a visual check for cracks and flaws.

2. Measure the surface of the cylinder head (on the cylinder block side) for warping. If it is

found to be beyond the limit designated below, regrind the affected surface with a surface grinder.

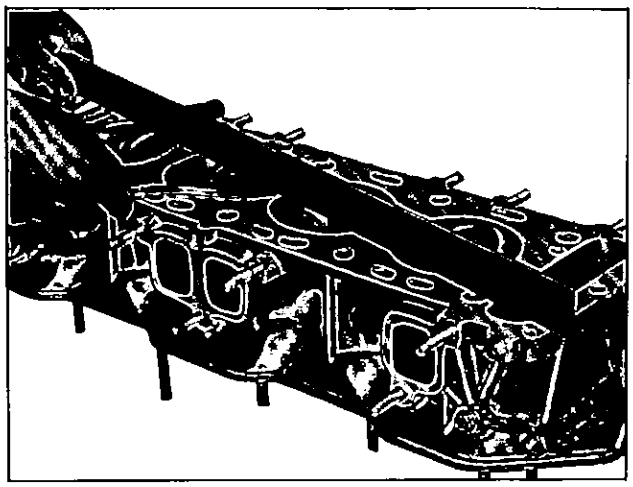

Fig. EM-22 Checking the cylinder head surface

	Standard	Maximum
Head surface flatness	Less than 0.03 mm (0.0012 in.)	0.1 mm (0.0039 in.)

Valve assembly

1. Check each of the intake and exhaust valve assemblies for worn, damaged or deformed valve heads or stems. Correct or replace the valve, if any excessive defects are defected.

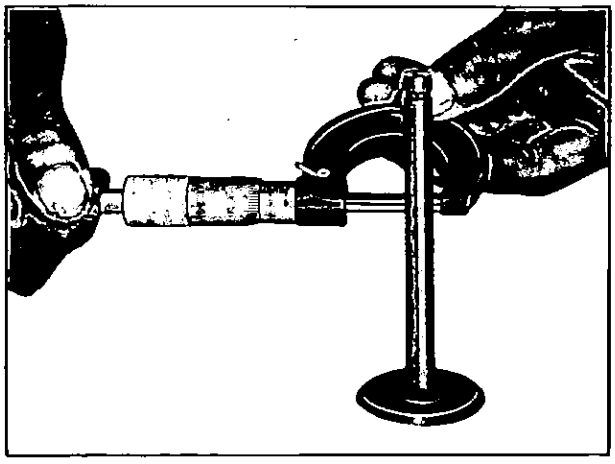

Fig. EM-23 Checking valve stem diameter

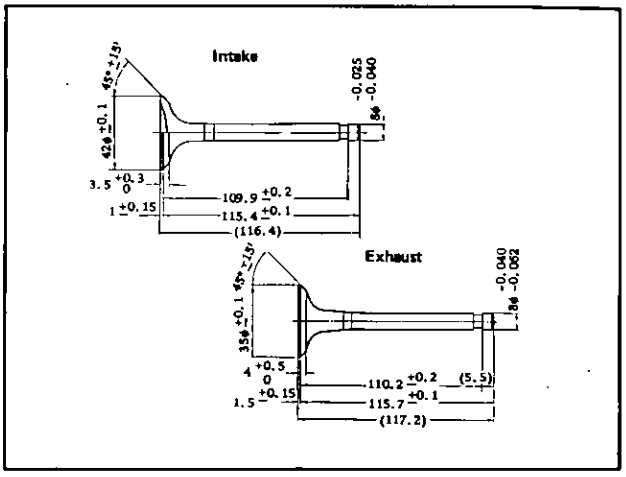

Fig. EM-24 Intake and exhaust valve

2. The valve face or valve stem end surface should be refaced by using a valve grinder.

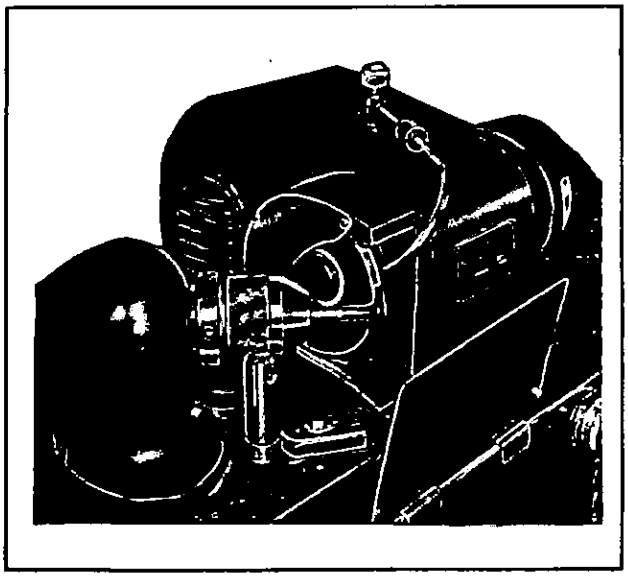

Fig. EM-25 Valve grinder

Note: When the valve head has been reduced to 0.5 mm (0.0197 in.) or less in thickness, replace the valve.
Grinding allowance for the valve stem end surface is 0.5 mm (0.0197 in.) or less.

Valve spring

1. Measure the free length and the tension of each spring. If the measured valve exceeds the specified limit, replace the spring.

	Outer	Inner
Free length	42.5 mm (1.673 in.)	41.4 mm (1.630 in.)
Valve closed	37.0 mm at 19.4 ± 1.0 kg (1.457 in. at 42.8 ± 2.2 lb.)	34.0 mm at 10.8 ± 0.5 kg (1.339 in. at 23.8 ± 1.1 lb.)
Valve open	29.0 mm at 47.6 ± 2.4 kg (1.142 in. at 104.9 ± 5.3 lb.)	26.0 mm at 22.5 ± 1.1 kg (1.024 in. at 49.6 ± 2.4 lb.)

2. Check the deformation of each spring with a square. Any springs with the deflection of 1.6 mm (0.0630 in.) or more must be replaced.

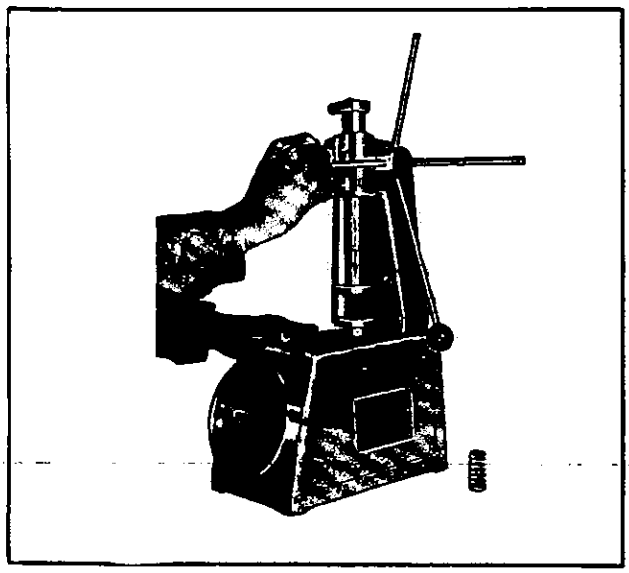

Fig. EM-26 Checking valve spring

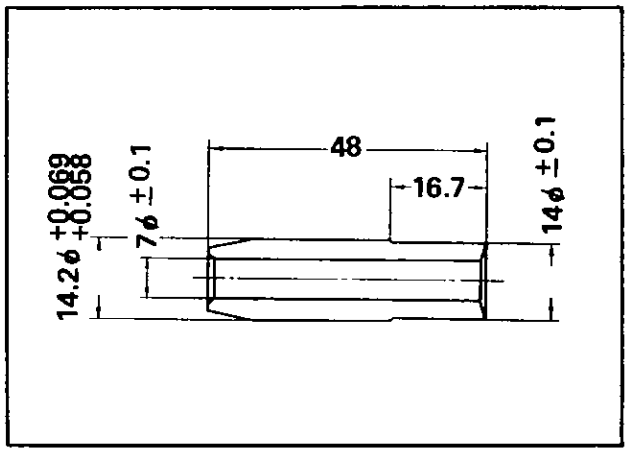

Fig. EM-27 Guide intake (over size)

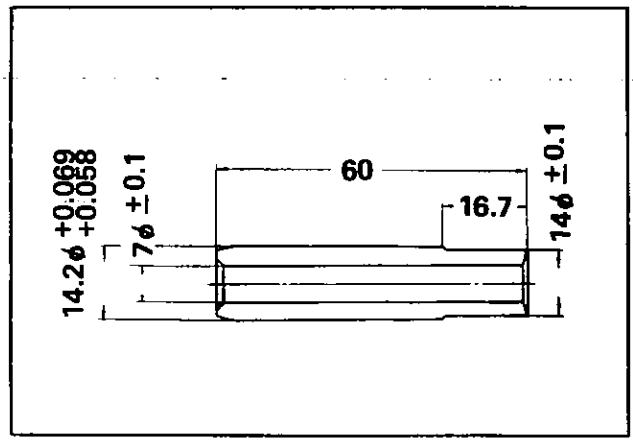

Fig. EM-28 Guide exhaust (over size)

Rocker arm and valve rocker pivot

Check the valve rocker adjusting screws and the cam contact for damage or wear. If defects are found, replace them.

Valve guides

Measure the clearance between the valve guide and the valve stem. If the clearance exceed the designated limit, replace the worn parts or both valves and valve guide. In this case, it is essential to determine it such a clearance has been caused by a worn or bent valve stem or by a worn valve guides.

	Intake valve	Exhaust valve
Stem to guide clearance	0.025 ~ 0.055 mm (0.0010 ~ 0.0022 in.)	0.04 ~ 0.077 mm (0.0016 ~ 0.0030 in.)
Max. tolerance of above clearance	0.1 mm (0.0039 in.)	0.1 mm (0.0039 in.)

Determining clearance

Precise measurement of clearance between the valve stem and the valve guide needs the aid of a micrometer and a telescope hole gauge. By using these gauge, check the diameter of the valve stem in three places; center and bottom. Inspect telescope hole gauge in valve guide bore, measuring at center. Subtract the highest reading of valve stem diameter from valve guide bore measured to obtain its clearance from the two center diameter to obtain valve to valve guide clearance. As an emergency expendient, a valve is pushed in the valve guide and moved to the left and the right at which point if its tip deflects about 0.2 mm (0.0079 in.) or more, it will be known that the clearance between the stem and the guide exceeds the maximum limit of 0.1 mm (0.0039 in.).

Note: The valve should be moved in parallel with the rocker arm. (Generally, a large amount of wear occurs in this direction.)

Replacement of valve guide.

A valve guide found defective must be replaced in the following manner:

1. Take out the old guide by means of a press and valve guide replacer set (ST49730000) (under a 2-ton pressure). This job may be carried out at room temperatures but with better effect at higher temperature.

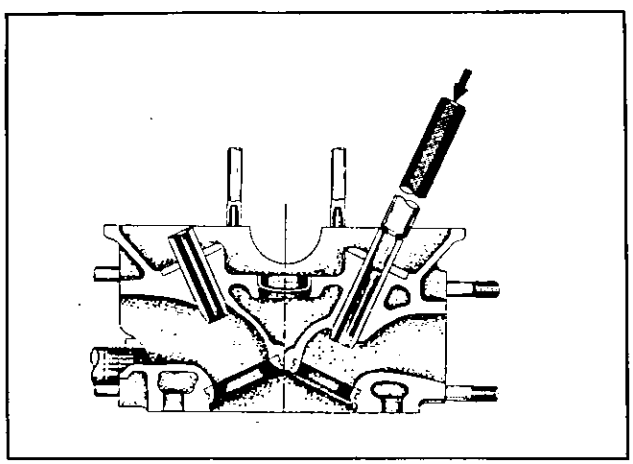

Fig. EM-29 Removing valve guide

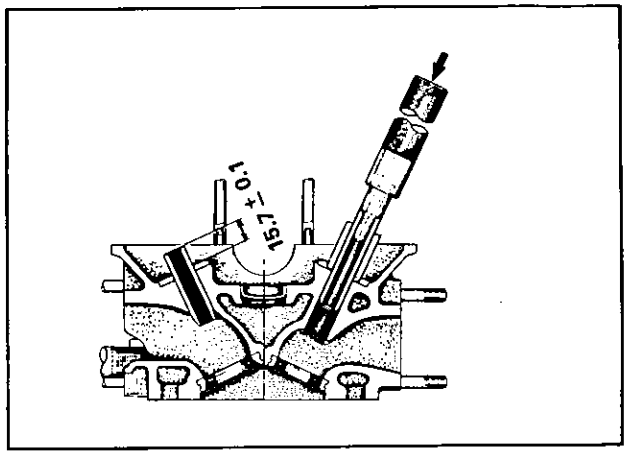

Fig. EM-30 Fitting valve guide

2. Ream cylinder head side guide hole at room temperature using reamer set (ST49710000).

	Standard	0.2 mm (0.0079 in.) over size
Cylinder head valve guide hole	14.0 ~ 14.018 mm (0.551 ~ 0.552 in.)	14.2 ~ 14.218 mm (0.559 ~ 0.560 in.)

3. Press the new valve guide into the guide hole with care so that it will fit smoothly after heat the cylinder head to a temperature of about 80° C (176° F) using valve guide replacer.

The valve guides of 0.2 mm (0.0079 in.) oversize diameter are available for service.

Interference fit of valve guide to valve guide hole	0.040 ~ 0.069 mm (0.0016 ~ 0.0027 in.)

4. Ream the bore of the valve guide pressed in, using a valve guide reamer set.

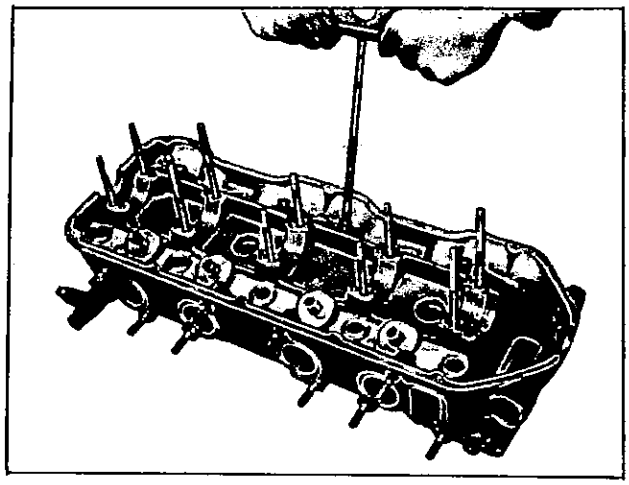

Fig. EM-31 Reaming valve guide

Valve guide reamer set: ST49710000
Reaming bore: 8.000 to 8.015 mm
(0.3150 to 0.3156 in.)

5. Correct the valve seat surface, with the new valve guide as the axis.

Valve seat insert

Check the valve seat inserts for any evidence of pitting at valve contact surface, and reseat valve seat inserts if the valve seat insert is worn out excessively.

Valve seat correction

In case of some deformation of pitching are found at the valve contacting face of valve seat, correct the valve seat by a valve seat cutter ST49720000.

Firstly, scrape the seat by 45° cutter, after that if the width of the contacting face is too wide, scrape intake side by 15°, 60° and exhaust side 15° in order to get prescribed width.

After finishing the correction, complete the valve contact to the valve seat by doing lapping.

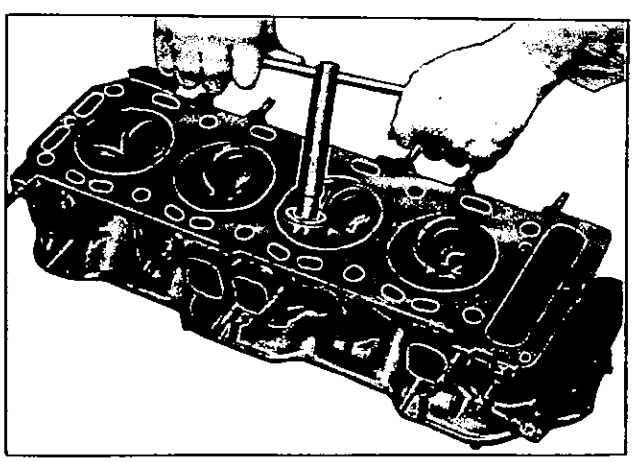

Fig. EM-32 Correcting valve seat

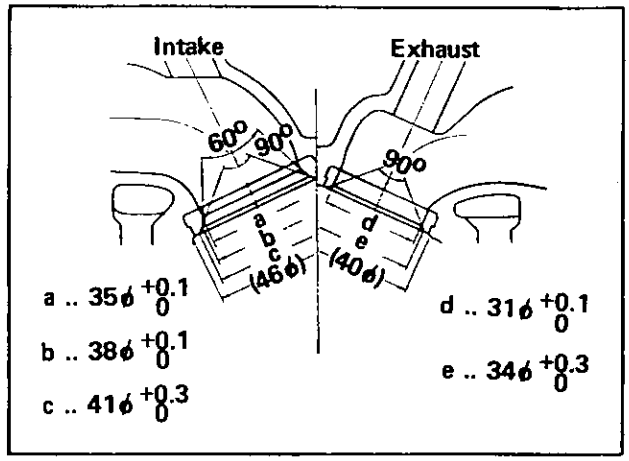

Fig. EM-33 Dimension for seat correction

Note: As the valve seat inserts of this engine are united into cylinder head by casting, replacement of the valve seat cannot be done.

CAMSHAFT AND CAMSHAFT BEARINGS

Camshaft bearing clearance check

Check the clearance by measuring the difference of the camshaft bearing inner diameter and camshaft journal outer diameter or by using plastigage.

If the wear outruns the limit, replace as the cylinder head assembly.

Tightening torque: 0.9 to 1.4 kg-m
(6.5 to 10.1 ft.lb.)

	Standard	Wear limit
Clearance	0.025 ~ 0.075 mm (0.0010 ~ 0.0030 in.)	0.1 mm (0.0039 in.)
Camshaft bearing inner diameter	37.5 ~ 37.525 mm (1.476 ~ 1.477 in.)	
Camshaft journal outer diameter	37.45 37.475 mm (1.474 ~ 1.475 in.)	

Valve timing check

If the camshaft shown no apparent damage although some valve operation troubles have been detected in the engine, compare valve timing data with the valve timing diagram to see whether the stroke beginning and end in various cylinders are complying with specified advance and retard figures.

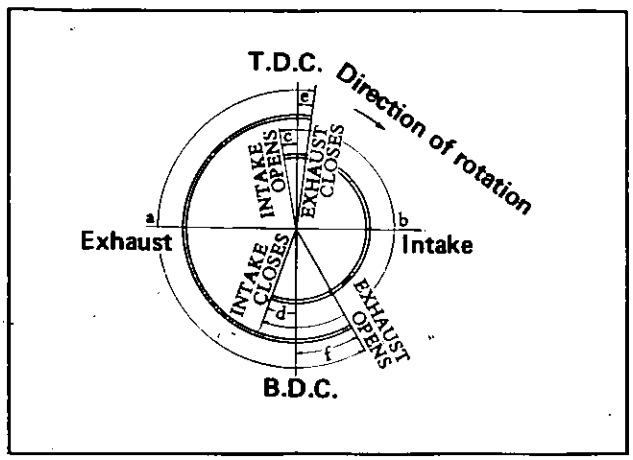

Fig. EM-34 Valve timing diagram

	a	b	c	d	e	f
G18	250	250	18	52	12	58

Unit: degrees

Camshaft alignment check

1. Check the camshaft, camshaft journal and cam surface for bend, wear or damage. If the defects are beyond the limits, replace the affected parts.

2. Bend values are expressed in terms of half values of the readings obtained when the camshaft is given a turn with a dial gauge applied to the center journal.

	Standard	Limit
Cam height	36.53 mm (1.438 in.)	36.0 mm (1.417 in.)
Camshaft bend	0.01 mm (0.0004 in.)	0.03 mm (0.0012 in.)
End play	0.07 ~ 0.148 mm (0.0028 ~ 0.0058 in.)	

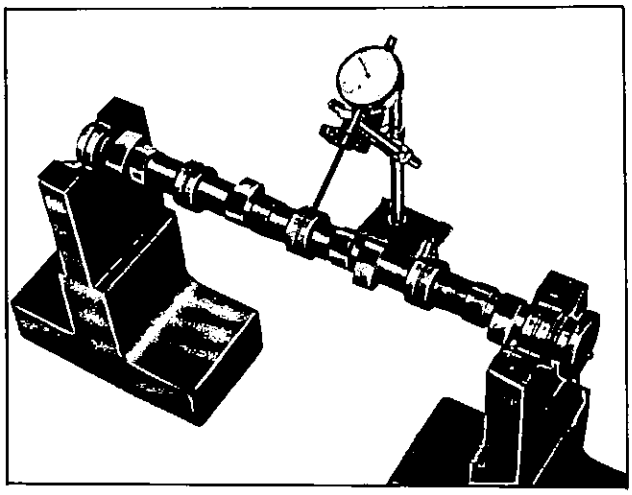

Fig. EM-35 Checking camshaft bend

Valve rocker

Check the valve rocker for cracks, cam contacting surface, clearance between rocker shaft and etc.

Replace if same cracks are found.

If wear or nibble is found at cam contacting surface, replace the valve rocker. In this case, check cam heels of camshaft at the same time. Slight damages at cam contacting surface of the valve rocker and cam heel can be corrected by oil stone.

In case of clearance of rocker shaft and rocker bushings is excessive replace the worn part.

	Standard	Wear limit
Clearance of rocker shaft and rocker bushing	0.016 ~ 0.052 mm (0.0006 ~ 0.0020 in.)	0.07 mm (0.0028 in.)
Rocker shaft outer diameter	17.566 ~ 17.584 mm (0.6915 ~ 0.6922 in.)	
Bushing inner diameter	17.6 ~ 17.618 mm (0.693 ~ 0.694 in.)	

CYLINDER BLOCK

1. Check visually for defects, such as cracks and flaws.

2. Measure the top face of the block (cylinder head mating face) for warping. If the warp exceeds the limit value, correct it.

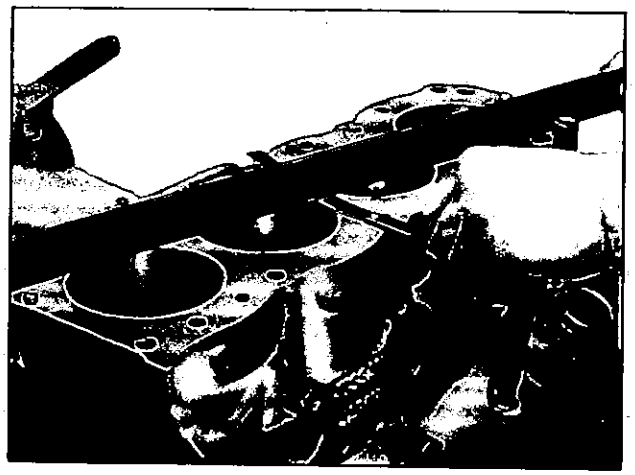

Fig. EM-36 Checking cylinder block flatness

	Standard	Limit
Surface flatness	Less than 0.03 mm (0.0012 in.)	0.10 mm (0.0039 in.)

3. Measure the cylinder bore for out-of-round or excessive taper with a bore gauge. If excessive wear, taper or out-of-round are detected on the cylinder wall, rebore the cylinder walls by a boring machine.

4. When the wear, taper and out-of-round are not excessive to the limit, remove the step at the topmost portion of the cylinder by using a ridge reamer or the like.

How to measure cylinder bore

A bore gauge is used. Measure the cylinder bore at top, middle and bottom points in each direction A and B as illustrated and record the measured values.

Wear of the cylinder bore is the difference of the maximum and minimum value.

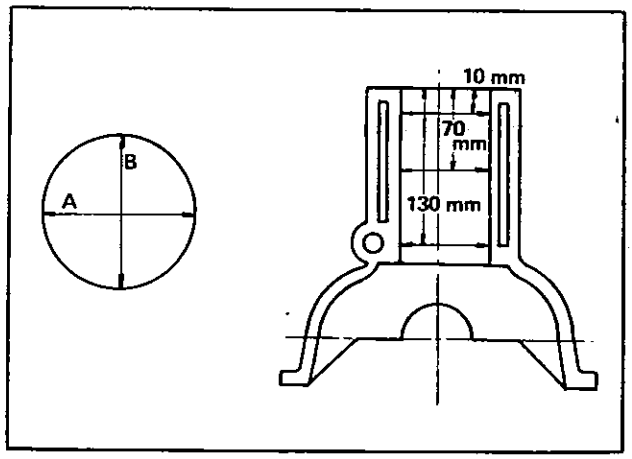

Fig. EM-37 Cylinder bore measuring position

	Standard	Limit
Cylinder bore	85.000 $^{+0.035}_{-0}$ mm (3.347 $^{+0.0014}_{-0}$ in.)	0.2 mm (0.0079 in.)
Ellipse; taper	0.02 mm (0.0008 in.)	
Difference of each four cylinder bore	0.05 mm (0.0020 in.)	0.2 mm (0.0079 in.)

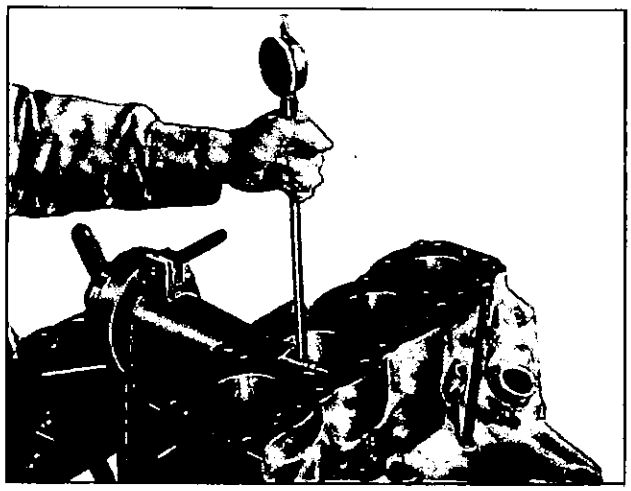

Fig. EM-38 Measuring cylinder bore

Boring of cylinder

1. When any of the cylinders needs boring, all other cylinders must be bored at the same time.

2. Determine piston oversize according to the amount of wear of the cylinder.

Piston for service

Piston size	Outer diameter
S.T.D.	84.958 ~ 84.990 mm (3.345 ~ 3.346 in.)
25 O.S.	85.220 ~ 85.240 mm (3.355 ~ 3.356 in.)
50 O.S.	85.470 ~ 85.490 mm (3.365 ~ 3.366 in.)
75 O.S.	85.720 ~ 85.740 mm (3.375 ~ 3.376 in.)
100 O.S.	85.970 ~ 85.990 mm (3.3846 ~ 3.3854 in.)
125 O.S.	86.220 ~ 86.240 mm (3.394 ~ 3.395 in.)

3. By measuring piston to be installed at piston skirt (side thrust face) and adding the wear of clearance specification, the finish hone cylinder measurement can be determined.

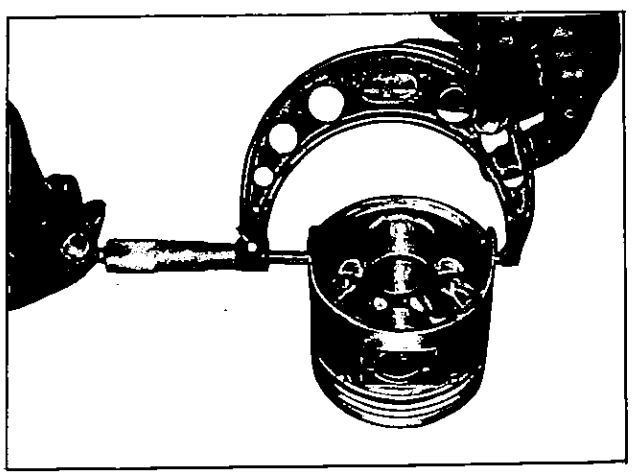

Fig. EM-39 Measuring piston diameter

Cylinder bore to be treated: A + B - C = A + 0.015 to 0.035 mm (0.0006 to 0.0014 in.)

Outer diameter of piston skirt: A
Piston-cylinder clearance: B = 0.030 to 0.050 mm (0.0014 to 0.0022 in.)
Hornning allowance: C = 0.02 mm (0.0008 in.)

4. Machine the cylinder bore to the determined inner diameter.

Note: To prevent strain due to cutting heat, bore the cylinders in the order of 2-4-1-3.

5. Do not cut too much out of the cylinder bore at a time, but cut 0.05 mm (0.0020 in.) or so at a time.

6. Measurement of the cylinder bore just machined requires the utmost care since it is expanded by cutting heat.

7. Finish the treated cylinder bore to a final finish bore by honing.

8. Measure the finished cylinder bore for elliptic or tapered part.

Note: If the cylinder bore has worn beyond the wear limit, use the cylinder liner.
Undersize cylinder liners are available for service.
Interference fit of cylinder liner to cylinder block 0.08 to 0.09 mm (0.0031 to 0.0035 in.).

Cylinder liner for service

	Outside diameter	Inside diameter
400 U.S.	89.091 ~ 89.126mm (3.507 ~ 3.509 in.)	83.5 ~ 84.5 mm (3.287 ~ 3.327 in.)

PISTON, PISTON PIN AND PISTON RING

1. Check for seizing, scratches and wear. Effect a replacement when such a defect is detected.

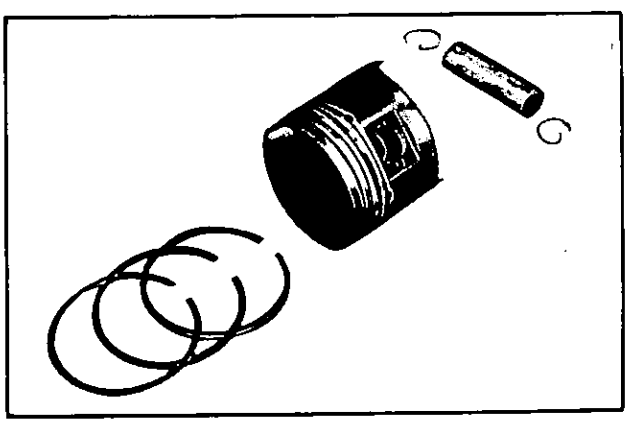

Fig. EM-40 Piston assembly

2. Measure the side clearance of rings in ring groove as each ring is installed. Clearance with new pistons and rings should be as follows.

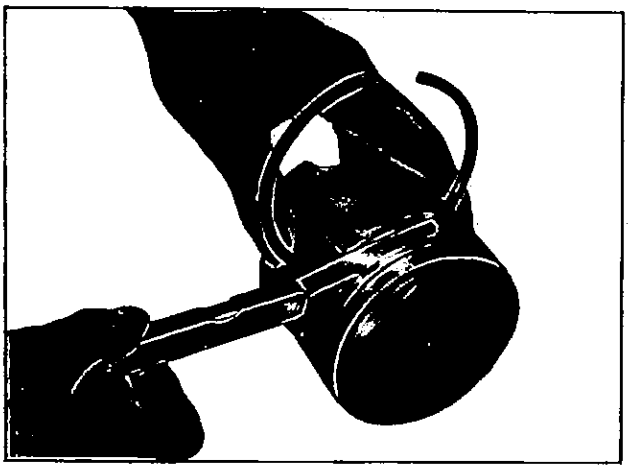

Fig. EM-41 Measuring side clearance

Side clearance

	Standard	Limit
Top ring	0.04 ~ 0.08 mm (0.0016 ~ 0.0031 in.)	0.1 mm (0.0039 in.)
Second ring	0.02 ~ 0.06 mm (0.0008 ~ 0.0024 in.)	0.1 mm (0.0039 in.)
Oil ring	0.02 ~ 0.06 mm (0.0008 ~ 0.0024 in.)	0.1 mm (0.0039 in.)

Ring gap

	Standard	Limit
Top ring	0.35 ~ 0.55 mm (0.0138 ~ 0.0217 in.)	1.0 mm (0.0394 in.)
Second ring	0.3 ~ 0.5 mm (0.0118 ~ 0.0197 in.)	1.0 mm (0.0394 in.)
Oil ring	0.35 ~ 0.55 mm (0.0138 ~ 0.0217 in.)	1.0 mm (0.0394 in.)

3. Place the ring at the bottom of the ring traveled part of cylinder bore in which it will be used. Square ring in bore by pushing it into position with the head piston.
Measure the gap between ends of ring with feeler gauge. Gap should be as listed above.

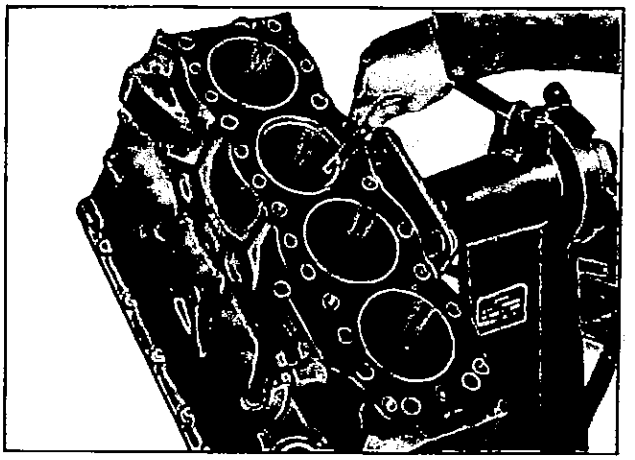

Fig. EM-42 Measuring ring gap

Note: a. When the piston ring only is to be replaced, without the cylinder bore being corrected, measure the gap at the bottom of the cylinder where the wear in minor.
b. Oversize piston rings are available for service. (25, 50, 75, 100, 125 oversize).

4. Measure the piston pin hole in relation to the outer diameter of the pin. If wear exceeding the limit is indicated, replace such piston pin together with the piston on which it is installed.

	Standard	Limit
Interference fit of piston pin to piston	0 ~ 0.09 mm (0 ~ 0.0035 in.)	Clearance 0.005 mm (0.0002 in.)
Clearance between piston pin and connecting rod bushing	0.006 ~ 0.013mm (0.0002 ~ 0.0005 in.)	0.03 mm (0.0012 in.)
Piston pin outer diameter	21.991 ~ 22.0mm (0.8658 ~ 0.8661 in.)	
Piston pin hole diameter of piston	21.987 ~ 21.0mm (0.827 ~ 0.866 in.)	
Connecting rod bushing inner diameter	21.995 ~ 22.008 mm (0.8659 ~ 0.8664 in.)	

CONNECTING ROD

1. If a connecting rod has any flaw within the both sides of the thrust face and the big end, correct or replace it.

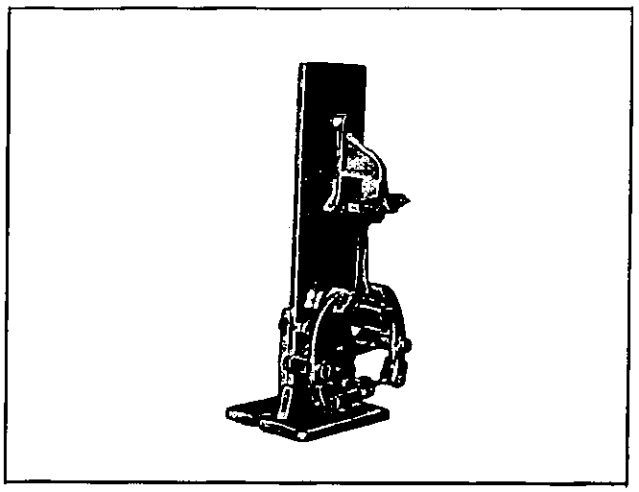

Fig. EM-43 Connecting rod aligner

2. Check for bend or torsion using a connecting rod aligner. If bends or torsion exceeds the limit, correct or replace the connecting rod.

	Standard	Limit
Big end end play	0.110 ~ 0.246 mm (0.0043 ~ 0.0097 in.)	0.3 mm (0.0118 in.)
Torsion bend (per 100 mm)	0.05 mm (0.0020 in.)	0.1 mm (0.0039 in.)

3. In replacing the connecting rod, select the rod so that the weight diference between new rods and old one become within 6 gr. (0.212 oz.) in unit weight.

4. Install connecting rods with bearing on to the corresponding crank pins and measure the thrust clearance. If the measured value exceed the limit, replace such connecting rod.

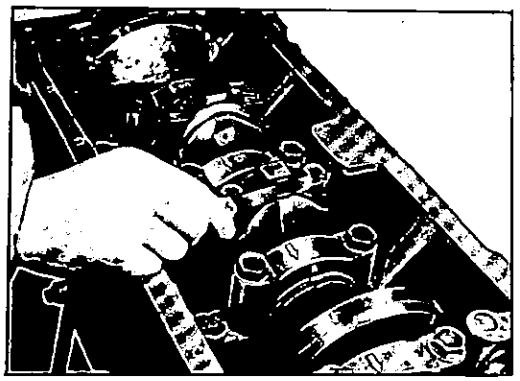

Fig. EM-44 Checking big end end play

CRANKSHAFT

1. Check the shaft journal and crank pin for scars, biased wear and cracks.
Repair or replace affected parts.

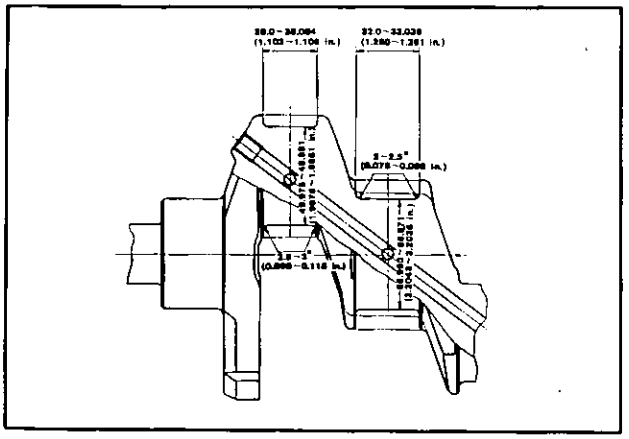

Fig. EM-45 Dimension for crankshaft measurement

Measurement of taper and out-of-round.

Measure A, B or X, Y direction shown in the Figure EM-46 by a micrometer.

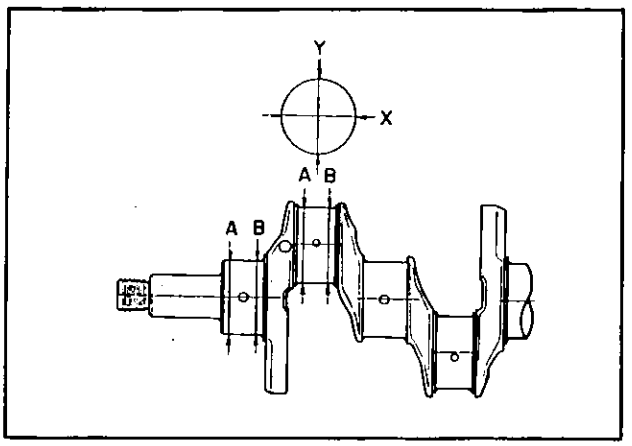

Fig. EM-46 Measuring point for crankshaft

Taper: Difference between A and B.
Out-of-round: Difference between X and Y.

	Standard	Limit
Taper, Out-of-round	Less than 0.01 mm (0.0004 in.)	0.03 mm (0.0012 in.)

2. Check the crankshaft for bend. If the bend exceeds the specified value repair or replace the crankshaft.

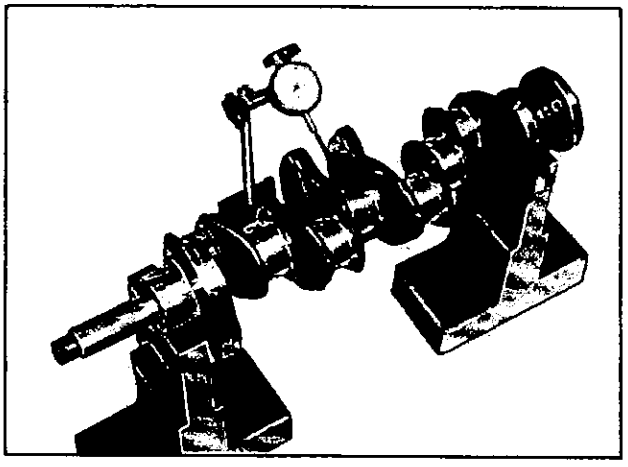

Fig. EM-47 Checking crankshaft bend

	Standard	Maximum
Crank shaft bend	Less than 0.03 mm (0.0008 in.)	0.05 (0.0020 in.)

Note: For measuring the bend, use a dial gauge. Bend values are half as much as the readings obtained when the crankshaft is given a turn with the dial gauge applied to its center journal.

3. After regrinding the crankshaft, finish it to the necessary size indicated in the lists on page EM-20 and by using an adequate undersize bearing according to the extent of required repair.

4. Install the crank shaft in the cylinder block and measure the thrust clearance. If it exceeds the specified value, replace the center shims.

Fig. EM-48 Checking crankshaft end play

	Standard	Wear limit
Crankshaft end play	0.060 ~ 0.192 mm (0.0024 ~ 0.0076 in.)	0.3 mm (0.0118 in.)

5. Check the main drive shaft pilot bearing at the rear of the crankshaft for wear and damage. Replace it if any defects are detected. The pilot bearing can be removed by using special tool (ST49700000) as illustrated in the Figure EM-49.

Before installing the pilot bearing, clean the bearing hole and apply oil to the bearing outer side then press the pilot bearing into the hole as illustrated in the Figure EM-50 by using a drift. After that, apply multi-purpose grease 2 grams (0.071 oz.) into the hole.

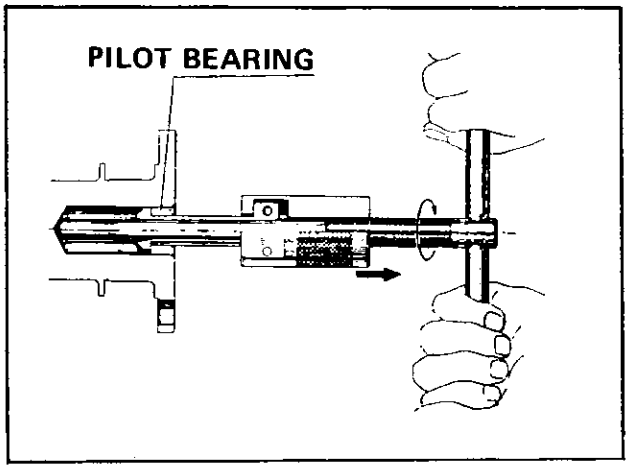

Fig. EM-49 Removing pilot bearing

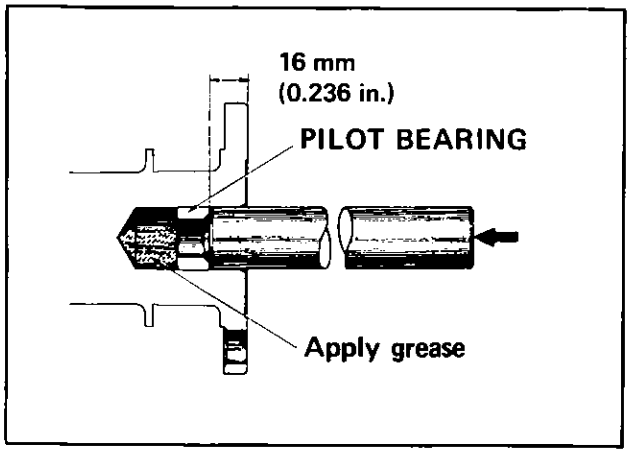

Fig. EM-50 Fitting pilot bearing

BUSHING AND BEARINGS

Measurement of main bearing clearance

1. Check all bearing and bushing for exfoliations, melts, scars and burrs.
Replace bushings, if any defects are detected.

2. Wipe off oil and dust (especially the rear of the bushing).

3. Set the main bearing on the cap block.

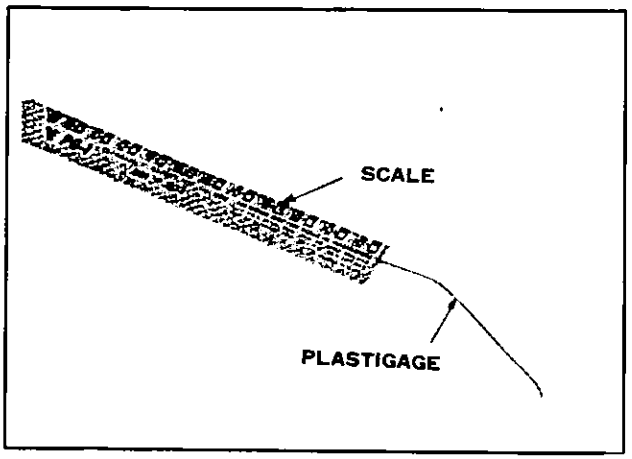

Fig. EM-51 Plastigage

4. Cut a plastigage to the width of the bearing and place it in parallel with the crank pin, getting clear of the oil hole. Install the cap and tighten them together under the specified torque.

Tightening torque: 10 to 11 kg-m
(72.3 to 79.5 ft.lb.)

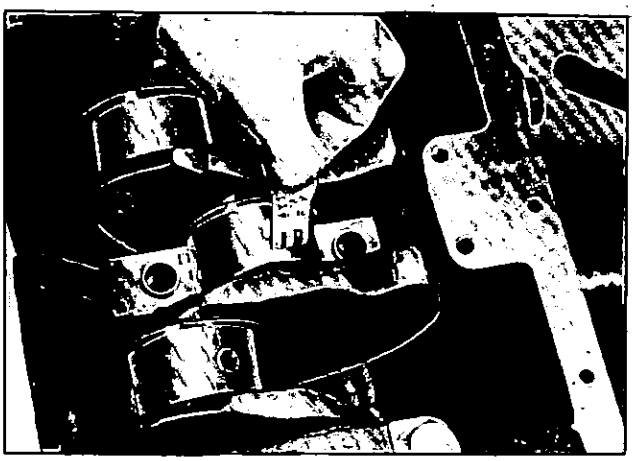

Fig. EM-52 Checking bearing clearance by plastigage

Note: Be sure not to turn the crankshaft when the plastigage is inserted.

5. Remove the cap, and meaure the width of the compressed plastigage at its widest part with the scale printed in the plastigage envelope. before removing it from the crankshaftor bearing.

Measurement of connecting rod bearing clearance

1. Measure the connecting rod bearing clearance in the same manner.

Tightening torque: 4.5 to 5.0 kg-m
(32.6 to 36.2 ft.lb.)

Bearing oil clearance

	Standard	Wear limit
Main bearing clearance	0.03 ~ 0.06 mm (0.0012 ~ 0.0024 in.)	0.1 mm (0.0039 in.)
Connecting rod bearing clearance	0.03 ~ 0.06 mm (0.0012 ~ 0.0024 in.)	0.1 mm (0.0039 in.)

2. If clearance proves to be in excess of the specified value, replace the bearing by undersizes and, consequently, grind out the crankshaft journal.

Fitting bearings

1. Set the bushings on the main bearing cap and the cylinder block bearing recess and install the bearing cap to the cylinder block bearing recess then tighten the bolts to the specified torque.
   Main bearing cap tightening torque 10 to 11 kg-m (72.3 to 79.5 ft.lb.)

2. Loosen the cap bolt on one side and Measure the clearance between the cap and block.

3. Ascertain that the clearance is within double the figures listed below. If it is not, replace the bearing.

4. Handle the connecting rod bearing in the same manner.
   Connecting rod cap bolt tightening torque: 4.5 to 5 kg-m (32.6 to 36.2 ft.lb.)

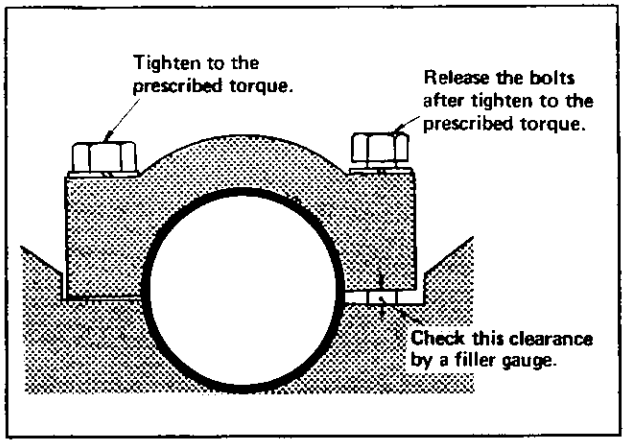

Fig. EM-53 Bearing crush check

Bearing crush	Standard
Main bearing	0 ~ 0.04 mm (0 ~ 0.0016 in.)
Connecting rod bearing	0 ~ 0.04 mm (0 ~ 0.0016 in.)

Main bearing under size

Bearing size	Bearing thickness	Crank journal diameter
S.T.D.	2.485 ~ 2.505 mm (0.0978 ~ 0.0986 in.)	55.971 ~ 55.990 mm (2.2036 ~ 2.2043 in.)
25 U.S.	2.612 ~ 2.625 mm (0.1028 ~ 0.1033 in.)	55.721 ~ 55.740 mm (2.194 ~ 2.195 in.)
50 U.S.	2.737 ~ 2.750 mm (0.1078 ~ 0.1083 in.)	55.471 ~ 55.490 mm (2.184 ~ 2.185 in.)
75 U.S.	2.862 ~ 2.875 mm (0.1127 ~ 0.1132 in.)	55.221 ~ 55.240 mm (2.174 ~ 2.175 in.)
100 U.S.	2.987 ~ 3.000 mm (0.1176 ~ 0.1181 in.)	54.971 ~ 54.990 mm (2.164 ~ 2.165 in.)

Connecting rod bearing under size

Bearing size	Bearing thickness	Crank pin diameter
S.T.D.	1.483 ~ 1.499 mm (0.0584 ~ 0.0590 in.)	49.975 ~ 49.991 mm (1.967 ~ 1.968 in.)
25 U.S.	1.609 ~ 1.622 mm (0.0633 ~ 0.0639 in.)	49.725 ~ 49.741 mm (1.9576 ~ 1.9582 in.)
50 U.S.	1.734 ~ 1.747 mm (0.0683 ~ 0.0688 in.)	49.475 ~ 49.491 mm (1.9477 ~ 1.9483 in.)

75 U.S.	1.857 ~ 1.872 mm (0.0731 ~ 0.0737 in.)	49.225 ~ 49.241 mm (1.938 ~ 1.939 in.)
100 U.S.	1.984 ~ 1.997 mm (0.0781 ~ 0.0786 in.)	48.975 ~ 48.991 mm (1.928 ~ 1.929 in.)

MISCELLANEOUS COMPONENTS

Crankshaft sprocket, camshaft sprocket

1. Check tooth surface for flaws and wears. Replace defective sprocket if any defects are found.

2. Install the camshaft sprocket in position and check for run-out. If it is found to exceed 0.1 mm (0.0039 in.), replace the camshaft sprocket.

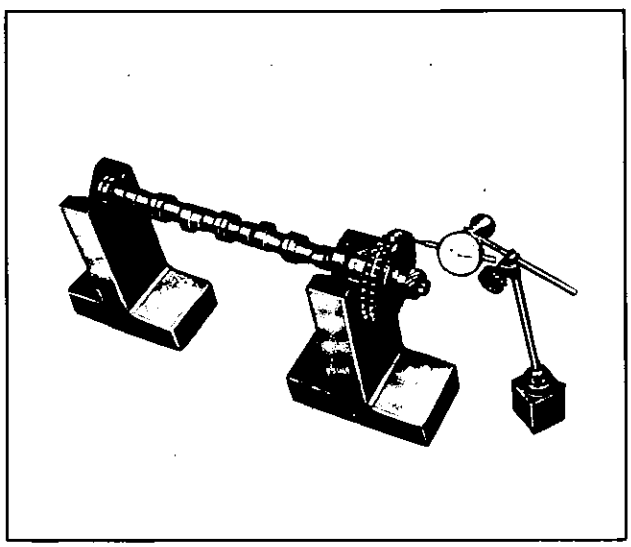

Fig. EM-54 Checking camshaft run-out

3. Check the chain for damage, severe wear and stretch at its roller links. Replace a defective chain.

Chain tensioner and chain guide

Check for wear and breakage. Replace if necessary.

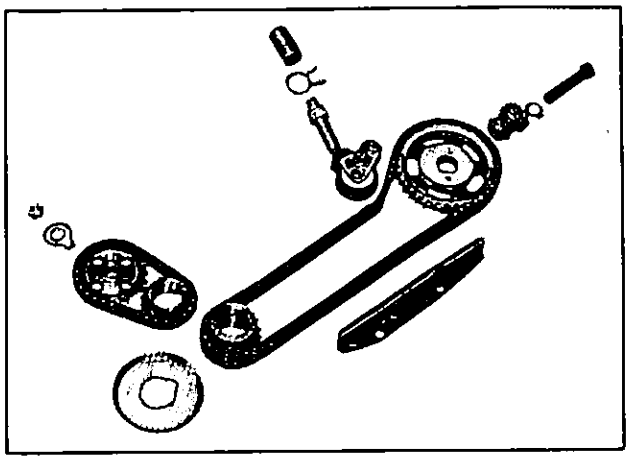

Fig. EM-55 Camshaft drive mechanism

Flywheel

1. Check the clutch disc contact surface of the flywheel for damage and wear. Repair or replace if necessary.

2. Measure deviation of the clutch disc contact surface with a dial gauge. If it exceeds 0.1 mm (0.0039 in.) replace it

3. Check tooth surfaces of the ring gear for flaws and wear. Replace if necessary.

Note: Replace the ring gear at about 180° to 200°C (356° to 392°F). When press the ring gear into the flywheel, pay attention to the direction of the chamber on the teeth.

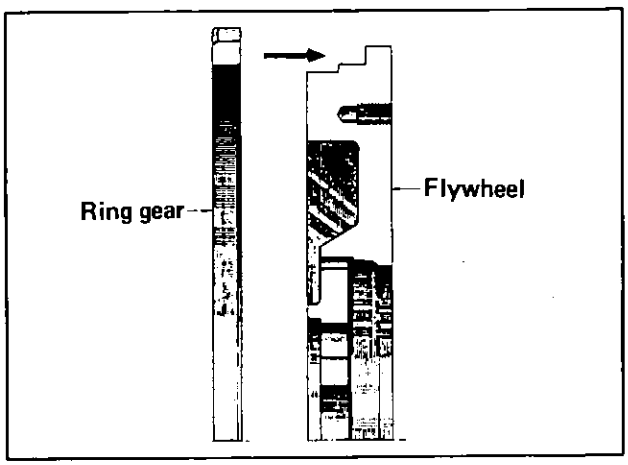

Fig. EM-56 Fitting ring gear

Front oil seal

Replace front oil seal if oil leaks or damages are found using front oil seal replacer (ST49740000).

When install a new oil seal, pay attention to the direction of the oil seal.

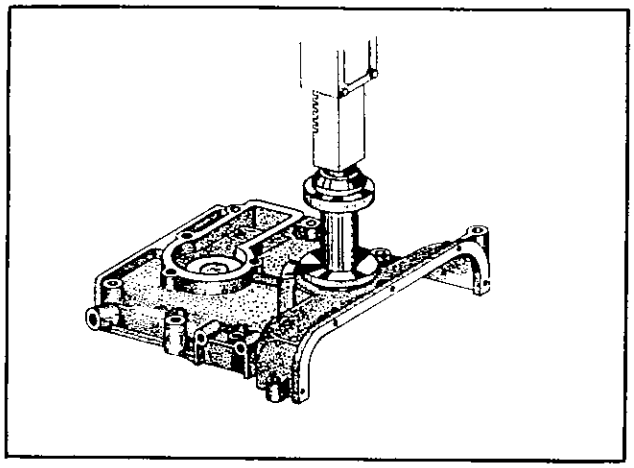

Fig. EM-57 Replacing oil seal

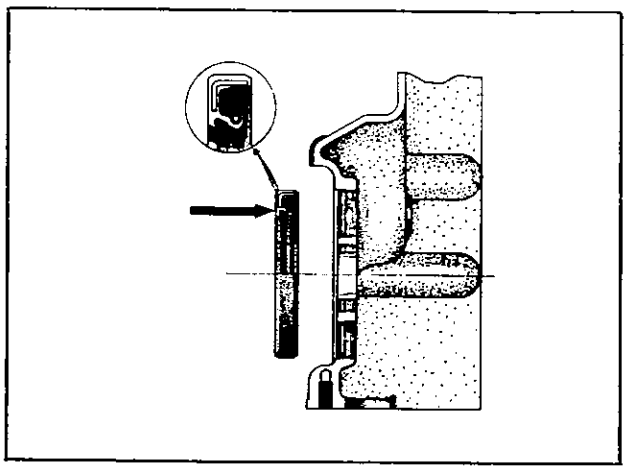

Fig. EM-58 Installation of oil seal

ENGINE ASSEMBLY

CONTENTS

PRECAUTIONS EM-22
CYLINDER HEAD EM-22
PISTON AND CONNECTING ROD EM-24
ASSEMBLING OF ENGINE EM-25

PRECAUTIONS

1. Use thoroughly cleaned parts. Particularly, check whether oil holes are clear of foreign matter or not.

2. In installing sliding parts, such as bearings proceed after applying engine oil to them as required.

3. Use new packings and oil seals, in principle.

4. Keep tools and work benches clean and clear of dust and oil stains.

5. Keep the necessary parts and tools ready near at hand.

6. Be sure to follow specified tightening torque and orders where necessary.

CYLINDER HEAD

1. Set the valve spring seat in position and then the valve. Install the oil seal ring onto the valve stem and put the seal ring cover over the oil seal ring.

Note: Make sure that interference of the oil seal ring is from 0.3 to 0.7 mm (0.0118 to 0.0276 in.). If interference is less than 0.3 mm, the oil seal ring or the cover must be replaced.

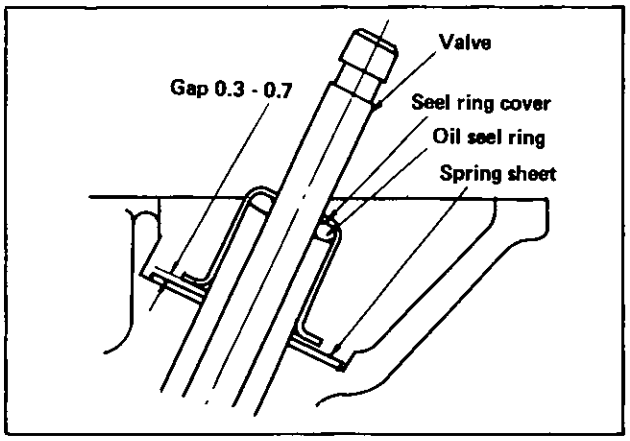

Fig. EM-59 Interference of oil seal ring

2. Assemble the outer and inner valve springs and retainer and mount the cotter by pressing the spring with the special tool.

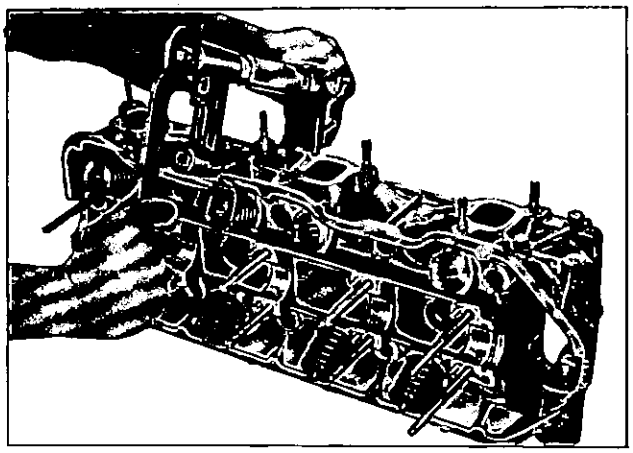

Fig. EM-60 Assembling valves

3. Assemble the camshaft bracket, valve rocker, seat, spacer, and spring on the valve rocker shaft in the manner shown in Figure EM-62.

Note: a. The exhaust rocker shaft have the identification marks, but the intake rocker shaft does not.

b. Both rocker shaft should be assembled so that the oil hole points to the direction shown in Figure EM-62.

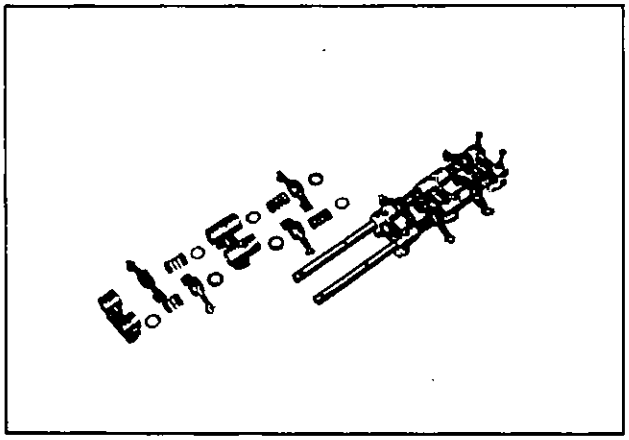

Fig. EM-61 Rocker shaft assembly

c. To prevent the camshaft bracket slipping out of the rocker shafts, it is advisable to insert bolts (any bolt will do) into the bolt holes of No. 1 and No. 5 camshaft brackets assembly.

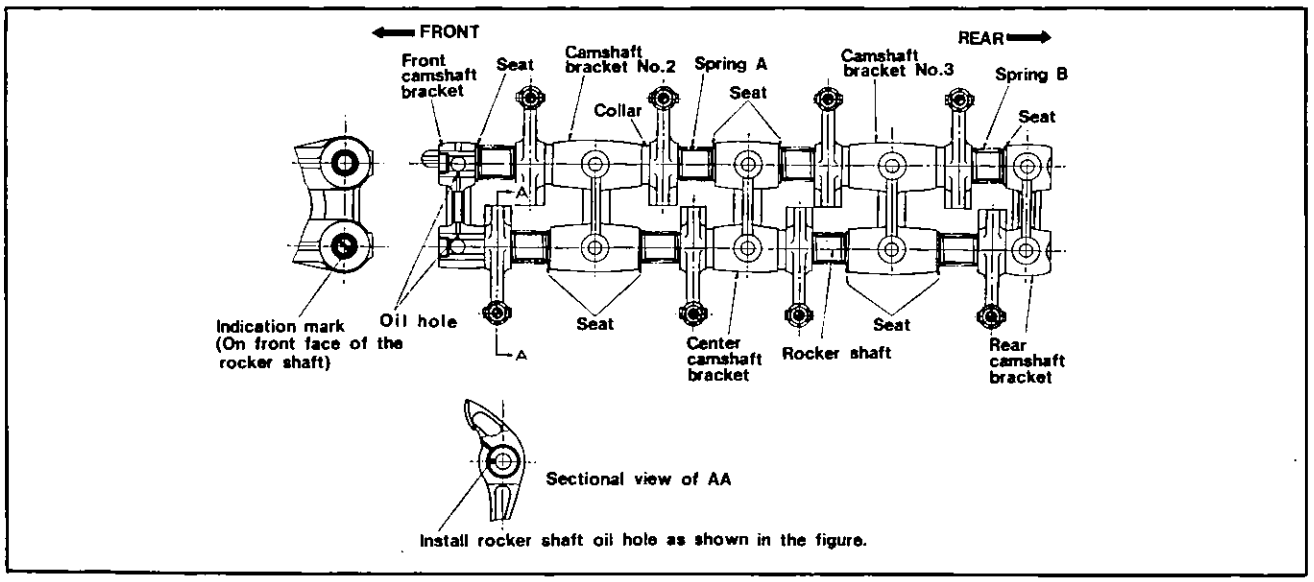

Fig. EM-62 Detail of rocker shaft assembly

4. Mount the camshaft onto the head, mount the valve rocker assembly, and tighten the nuts. At this time, align the punch marks on the flange of the camshaft with the "arrow" mark on the No.1 camshaft bracket.

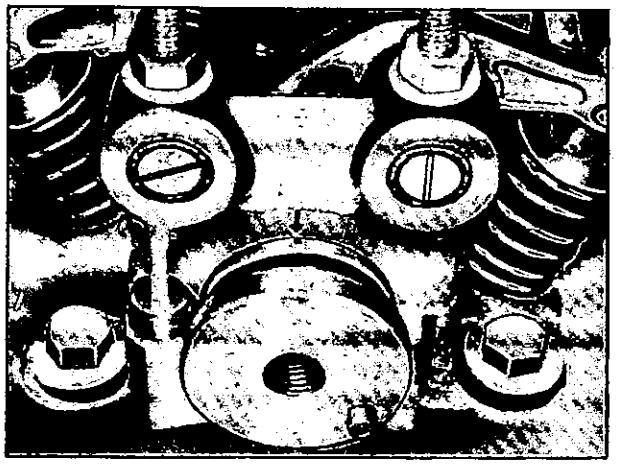

Fig. EM-63 Setting camshaft

Note: a. Adjust the adjusting screw on the valve rocker so that tip of the screw is slightly over the rocker.

b. Take sufficient care in positioning the rocker, since the tip of the bolt is apt to get out of the valve stem, as shown in Figure EM-64.

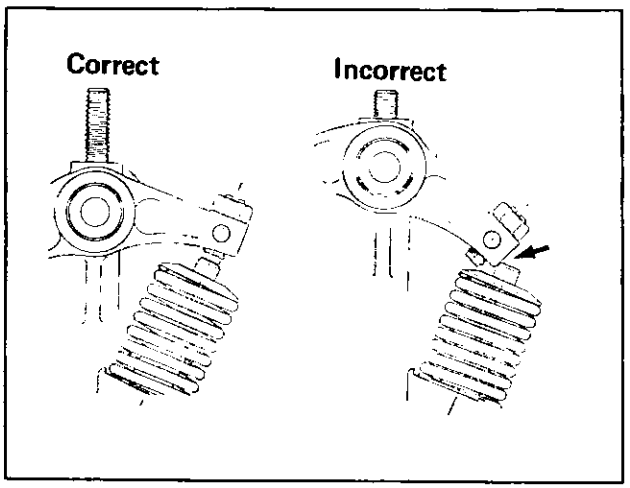

Fig. EM-64 Setting of rocker arm

PISTON AND CONNECTING ROD

1. Assemble the piston, piston pin, and connecting rod for each cylinder.

Note: a. Heat the piston to a temperature of from 50° to 60°C, (122° to 140°F) and the piston pin can be installed by finger.

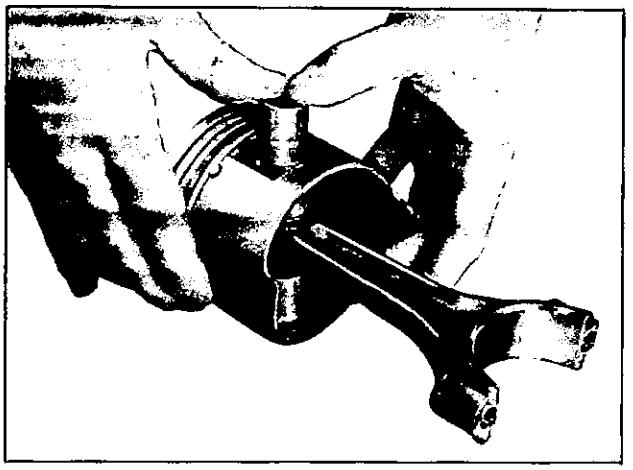

Fig. EM-65 Pressing piston pin

b. The assembling direction of the piston and the connecting rod is shown in Figure EM-66, ie., arrange so as the "arrow" mark on the piston head is directed toward the engine front.

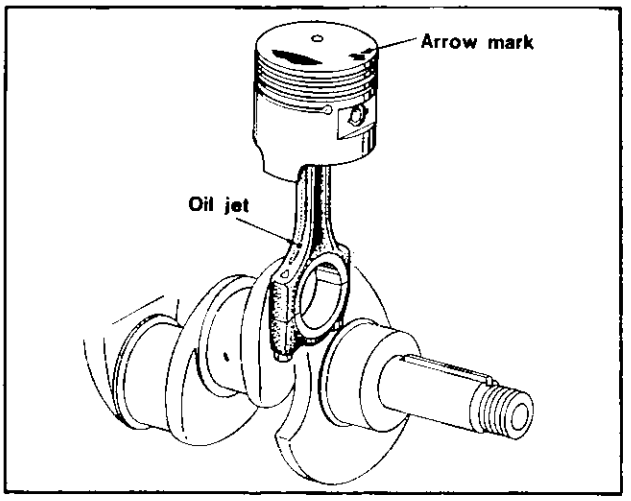

Fig. EM-66 Assembling piston and connecting rod

2. Install the piston pin clips on both sides of the piston pin.

Note: Use new piston pin clips. The clip must be installed as shown in Fig. EM-67

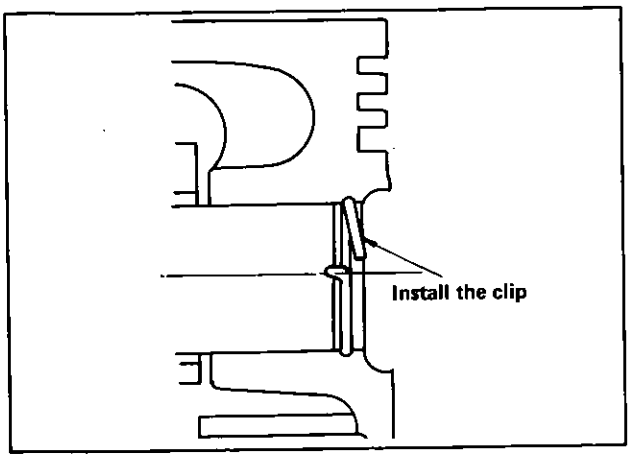

Fig. EM-67 Installing clip

3. Install the piston ring with the punch mark (facing) "up".

4. Fix the bearings onto the connecting rod and the connecting rod cap.

Note: Make sure that no dust or other foreign matter adheres to the back of bearings.

ASSEMBLING OF ENGINE

1. Place the cylinder block on the engine stand.

2. Insert the oil seals into the grooves of the cylinder block and the rear bearing cap and hold down by using the special tool(ST49750000). Then cut off the excessive seal ends with a knife.

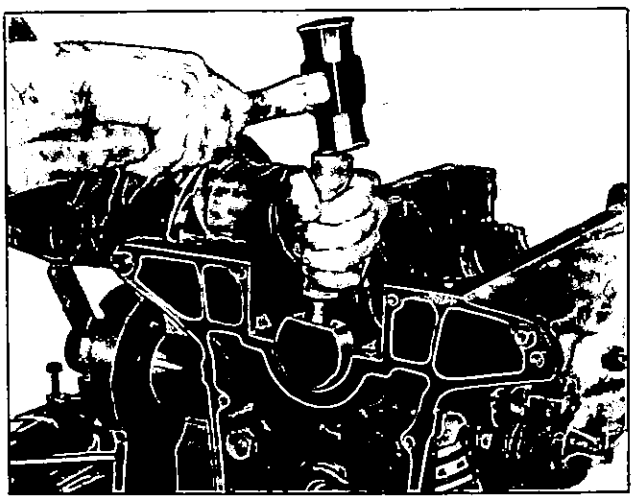

Fig. EM-68 Installing oil seal to cylinder block

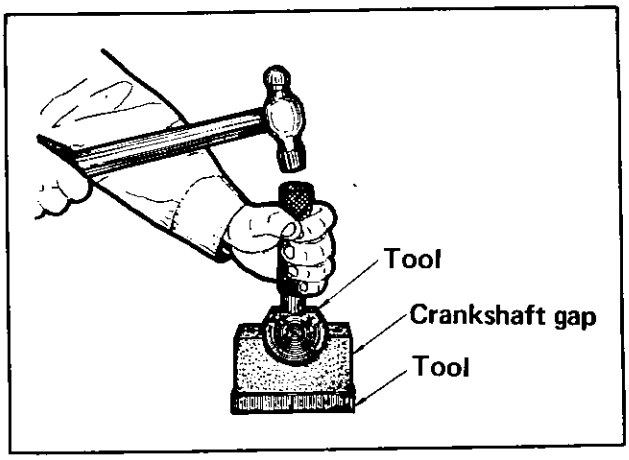

Fig. EM-69 Installing oil seal to rear bearing cap

3. Apply a screw sealing agent on the cylinder block oil hole plug and install to the cylinder block.

4. Fix the main bearings onto the cylinder block and the bearing caps.

Note: The same type bearings are used at all five locations.

5. Lubricate all main bearings with engine oil. Then install the crankshaft, and the bearing cap. Tighten to the specified tightening torque.
   Tightening torque: 10 to 11 kg-m (72.3 to 79.5 ft.lb.).

Note: a. Apply liquid packing ("Three bond No. 2" or equivalent) to the fitting surface of the rear bearing cap.

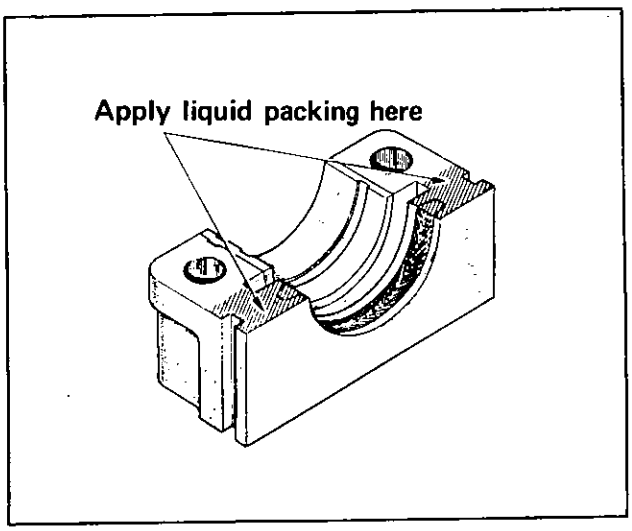

Fig. EM-70 Application of liquid packing

b. Install the thrust washer on both sides of the No. 2 bearing. The thrust washer should be installed so that oil channel faces to the crankshaft thrust face.

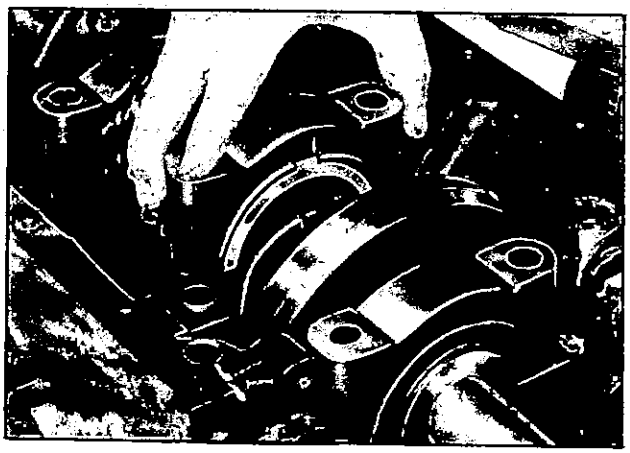

Fig. EM-71 Installing thrust washer

c. Arrange the bearing cap so that the "arrow" mark faces toward the front of the engine.

6. Install the rear bearing cap side seal. The rear bearing cap side seal must project from 0.2 to 0.6 mm (0.0079 to 0.0236 in.) from the lower portion of the cylinder block.

Note: Apply liquid packing to the projecting tip.

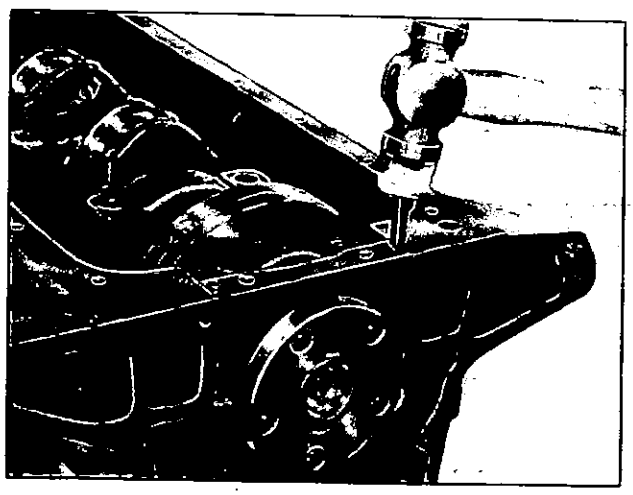

Fig. EM-72 Installing cap side seal

7. Install the engine rear plate.

8. Install the flywheel. After tightening the bolts to the specified torque, lock the bolts using new lock washer.

Tightening torque: 10 to 11 kg-m (72.3 to 79.5 ft. lb.)

9. Lubricate the crankshaft journals, pistons and cylinder bores with engine oil and install the piston rod assembly.

Note: a. Install the piston rings so that their gaps are at 180°C (356°F) to each other, is avoiding the gaps face to the thrust side of the piston or piston pin axial directions.

b. The "arrow" mark on the top of the piston should face the front of the engine.

10. Install the connecting rod cap.

Bolt tightening torque: 4.5 to 5.0 kg-m (32.6 to 36.2 ft. lb.)

Note: a. Install the caps to the connecting rod so that the mark on the big end side faces to the same side.

b. After tightening the bolt to the specified torque, bend the lock washer as shown in Fig. EM-73.

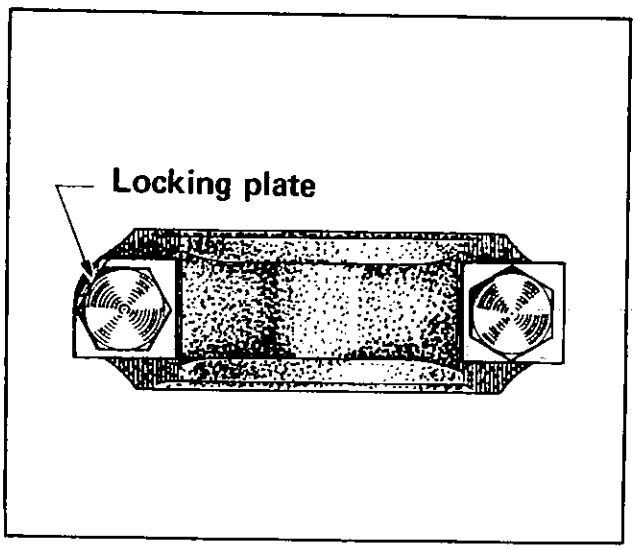

Fig. EM-73 Installation of piston assembly

11. Install the oil jet on the front of the cylinder block. Then install the chain tensioner and stopper.

12. Install the crankshaft sprocket and timing chain.

Note: Align the timing mark of the chain with the mark of the sprocked.

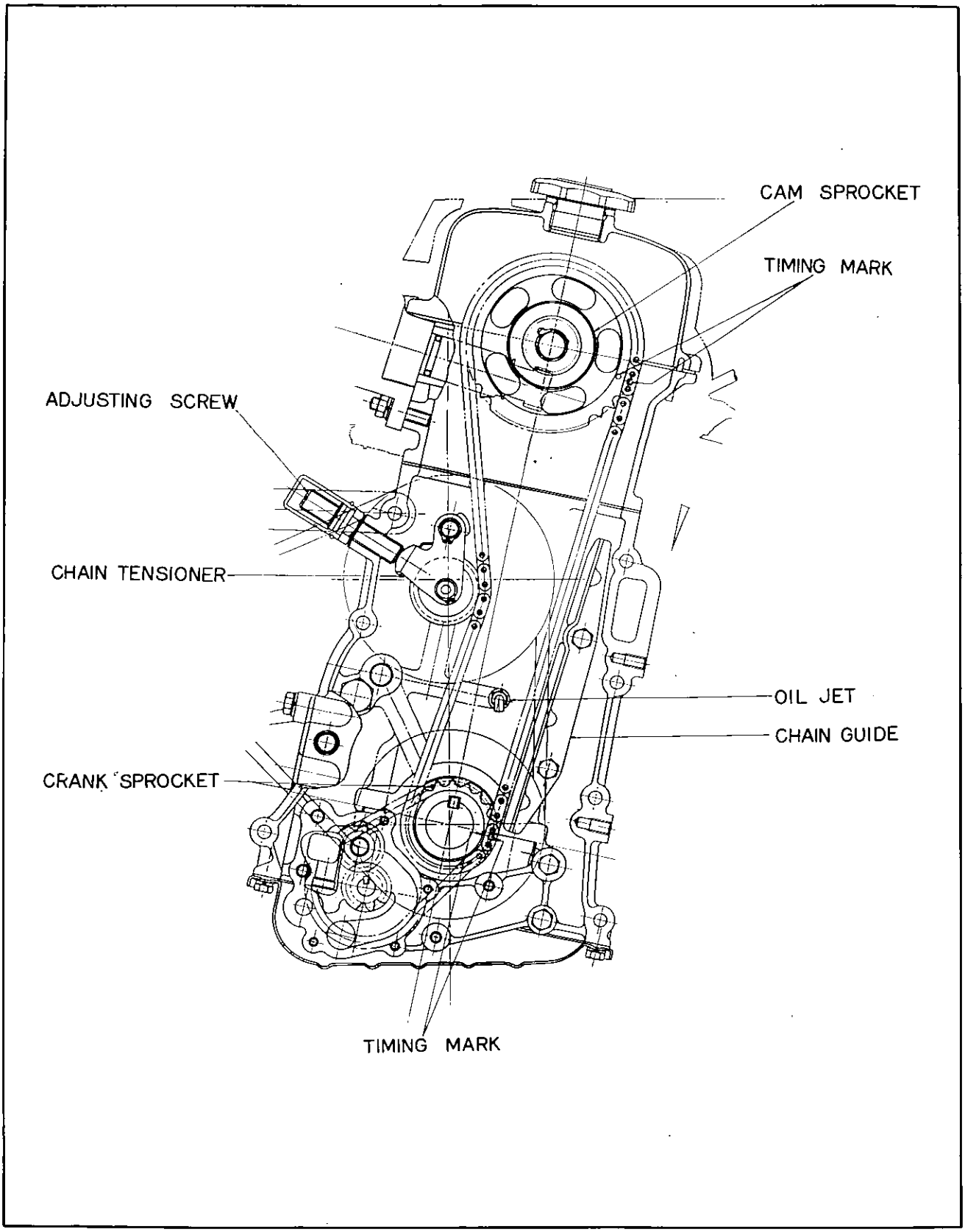

Fig. EM-74 Timing mechanism

13. Install the oil pump. Temporarily tighten the mounting bolts.

Note: Apply sealing agent ("Three Bond No. 4" or equivalent) onto the oil pump mounting surface, as shown in Figure EM-75.

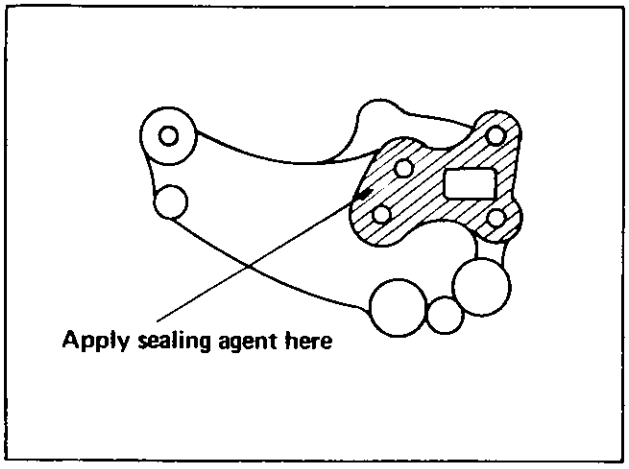

Fig. EM-75 Application of liquid packing

14. Install the oil pump chain together with the two sprockets. Tighten the nut securing the oil pump sprocket to the pump drive shaft and bend the lock washer.

Note: Adjust the tension of the oil pump chain by moving the oil pump body with the pin as the central point. Then tighten the oil pump mounting bolt securely.

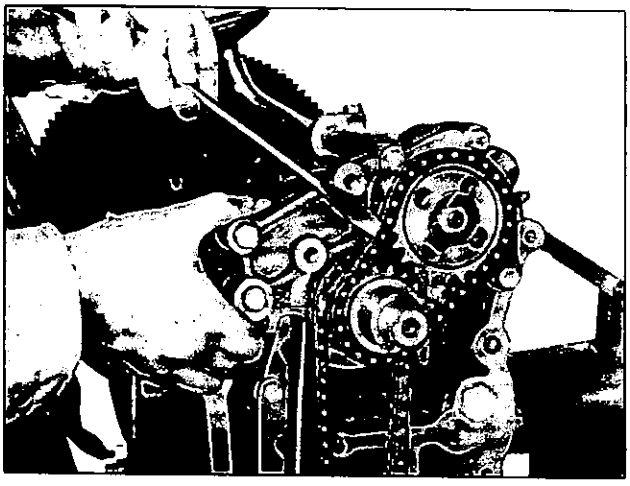

Fig. EM-76 Adjusting oil pump chain tension

15. Install the oil flinger in the direction shown in Figure EM-77.

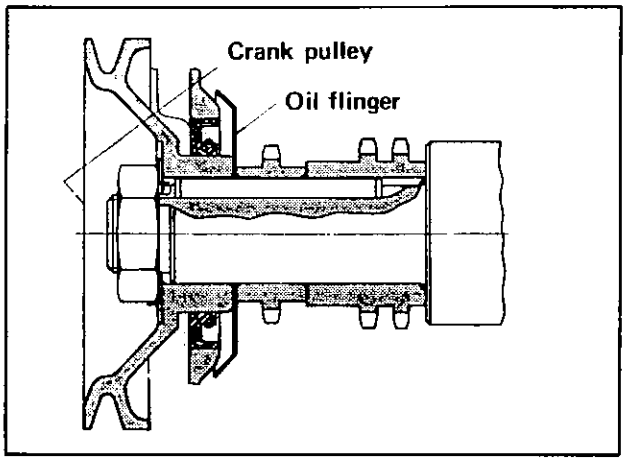

Fig. EM-77 Installation of oil flinger

16. Install the chain cover.

Note: a. Apply sealing agent ("Three Bond No. 1" or equivalent) onto the gasket.
b. Ensure that the boss on the back of the chain cover is located between the timing chain.
c. Cut off the upper and lower projecting portions of the gasket.

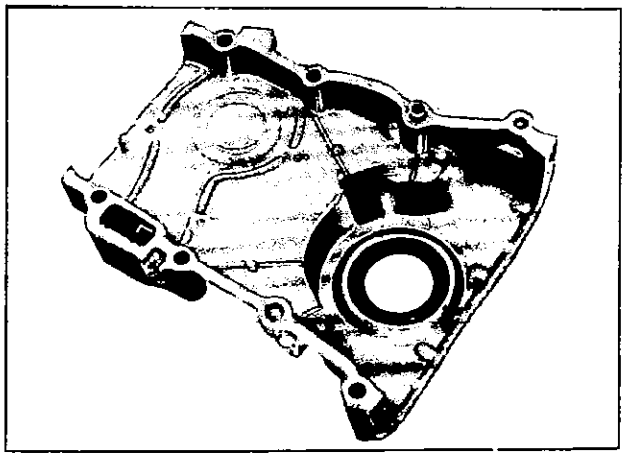

Fig. EM-78

17. Install the crankshaft pulley and tighten the nut to the specified tightening torque. Then bend the lock washer.

Tightening torque: 15 to 20 kg-m (108.5 to 144.6 ft. lb.)

18. Install the oil strainer.

19. Install the oil pan.

20. Turn the engine up-side down and set the No. 1 cylinder piston to the "Top dead center" position of the compression stroke.

Note: a. Align the notch on the crank pulley to the "T" mark on the chain cover.

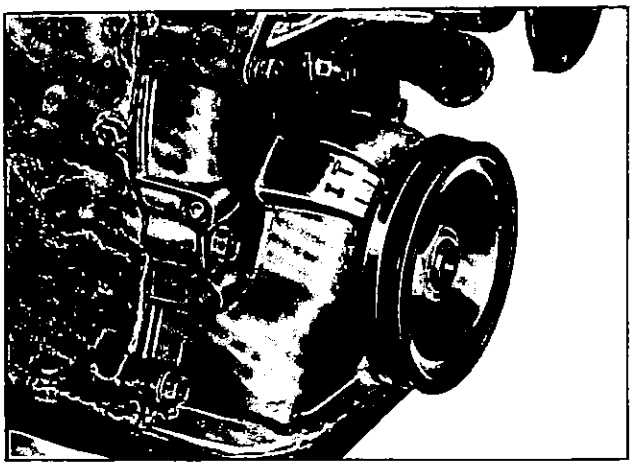

Fig. EM-79 Timing mark

b. Even when the engine was turned upward, the timing chain does not fall into the chain cover since the timing chain is supported with the rear boss of the chain cover. Under this condition, when the crankshaft is rotated, the chain will not run off the sprocket.

21. Install the cylinder head assembly.

Note: a. Apply sealing agent onto the cylinder block side of the head gasket ("Three Bond No. 4" or equivalent). At this time, make sure that the sealing agent has not entered into the cylinder.

b. Tighten in the manner shown in Figure EM-81 with the tightening torque applied is several steps.

Tightening torque: 8 to 9 kg-m (57.9 to 65.1 ft.lb.)

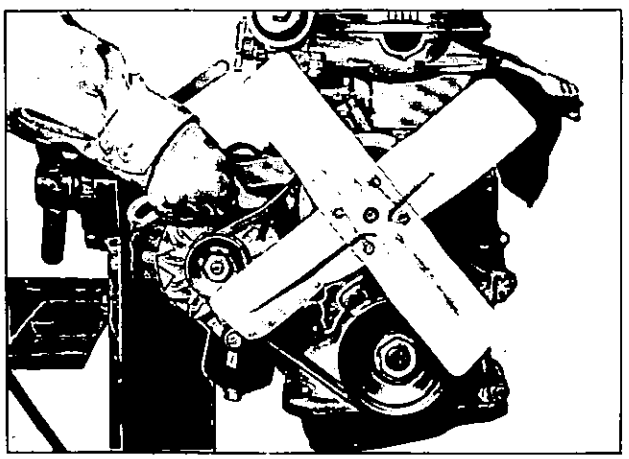

Fig. EM-80 Installing cylinder head

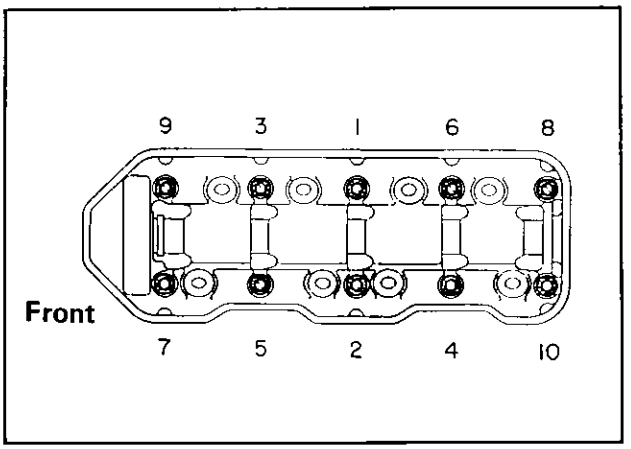

Fig. EM-81 Cylinder head tightening order

22. Pull out the timing chain from the chain cover and set the chain on the camshaft sprocket making their mating marks meet each other. Then strike the camshaft sprocket with chain onto the camshaft.

23. Install the distributor drive gear on the camshaft and tighten the bolt to the specified torque.

Tightening torque: 4.5 to 5.5 kg-m (32.6 to 39.8 ft.lb.)

Then bend the lock washer.

Note: The camshaft bolt has left-hand threads.

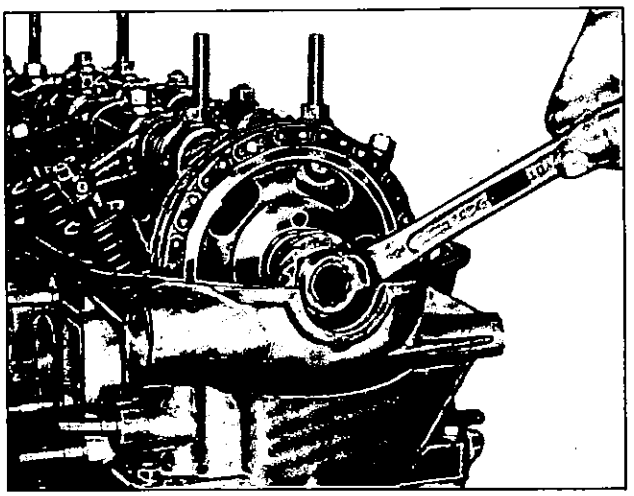

Fig. EM-82 Installing camshaft sprocket

24. Adjust the valve clearance.

Note: Adjustment of valve clearance is made with each cylinder set at the top dead center of the

compression stroke.
Specified clearance (At room temperature: 0.2 mm (0.0079 in.) for both intake and exhaust).

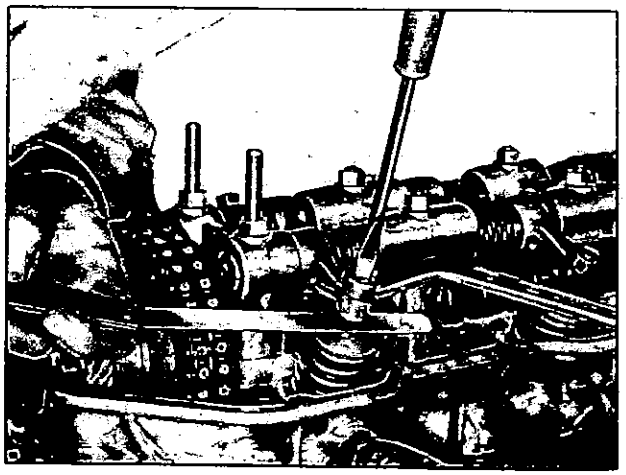

Fig. EM-83 Adjusting valve clearance

(Ref. : When warmed: 0.25 mm (0.098 in.)

25. Supply oil to the oil bath of the cylinder head.

26. Install the rubber plugs on the front and rear end of the cylinder head.

Note: Apply sealing agent to the rear rubber plug. ("Three Bond No. 2" or equivalent).

27. Install the chain adjusting screw.

Note: Adjustment of the chain tension is made in the following sequence.
a. Rotate the crankshaft clockwise and establish correct chain tension.
b. After threading in the adjusting screw fully by hand, back it off 1/2 turn and lock with the lock nut.
c. As the width of across flat of the lock nut is 21.6 ± 0.3 (same as that of the spark plug), the nut can be tightened or loosened with the spark plug wrench.

28. Install the valve locker cover.

29. Install the water pump. One of the mounting bolts of the water pump is also used to retain the generator adjusting arm.

30. Install the generator bracket and alternator.

31. Install the water pump pulley, fan blade and fan belt.

Note: The fan bolts have a hole for lock wires. After tightening the bolts, lock each two bolts with a lock wire.

32. Adjustment of fan belt tention.
Adjust fan belt tension by changing the position of the alternator to establish the specified tension between the water pump pulley and the alternator.

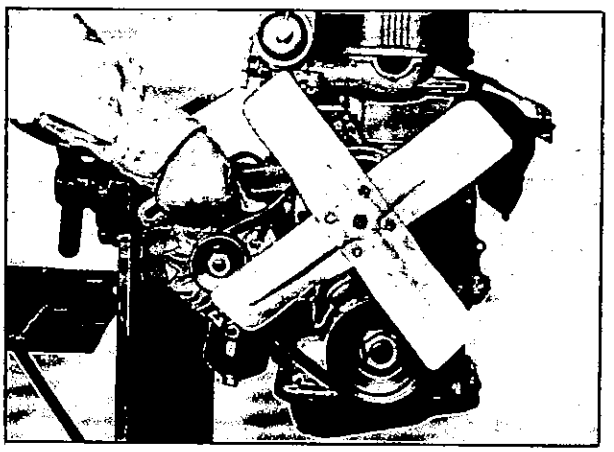

Fig. EM-84 Adjusting fan belt tension

33. Install the oil filter.

34. Install the rocker cover hose.

35. Install the distributor so that the vacuum controller and the rotor are in positions shown in Figure EM-85. Temporarily tighten the lock nut.

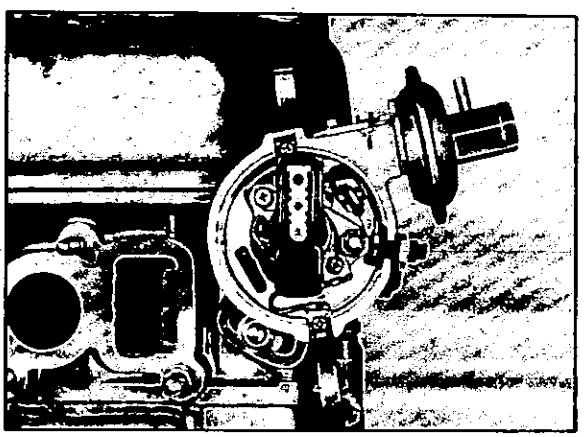

Fig. EM-85 Location of distributor rotor

Note: Apply sufficient oil to the distributor driven gear. Adjustment of ignition timing is performed in the time of running-in engine or after the engine installed on the vehicle.

36. Install the gas breather.

Note: The clamp of the pipe is tightened in company with the exhaust manifold.

37. Install the spark plug and connect the high tension cable.

38. Install the exhaust manfiold. At the same time, install the heat shield plate and engine slinger and tighten them together.

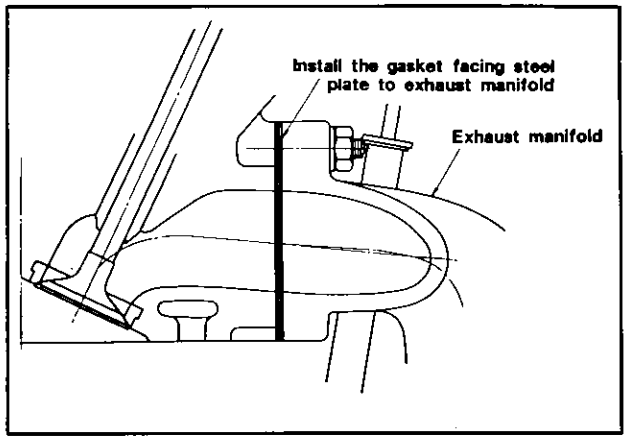

Fig. EM-86 Installation of exhaust manifold gasket

Note: Install the exhaust manifold gasket with the steel plate surface of the grommet facing in the direction of the manifold.

39. Install the clutch.

40. Remove the engine from the engine stand and install the transmission, intake manifold with carburetor starter motor, engine mount, oil pressure warning switch, gasoline drain tube etc.

SERVICE DATA AND SPECIFICATIONS

GENERAL SPECIFICATION

Cylinder arrangement	4 in line
Bore and stroke	85 × 80 mm (3. 346 × 3. 150 in.)
Displacement	1, 815 c. c. (110. 8 cu. in.)
Valve arrangement	OHC
Max. brake horse power SAE	105 HP/5, 600 rpm
Max. torque	15. 9 kg-m (115 ft. lb.)
Firing order	1-3-4-2
Engine idle rpm	600 rpm (STD)
Compression ratio	8. 3 : 1
Vacuum pressure of intake manifold at idle	More than 495 mmHg (19. 8 inHg)
Oil pressure	4. 7 ~5. 5 kg/cm^2 (66. 8 ~78. 2 lb/in^2) /3, 000 rpm

TIGHTENING TORQUE

Main bearing cap bolt	10 ~ 11	kg-m	(72.3 ~79.5 ft.lb.)
Connecting rod bolt	4.5 ~ 5	kg-m	(32.6 ~ 36.2 ft.lb.)

Flywheel bolt	10 ~ 11	kg-m	(72.3 ~ 79.5	ft.lb.)
Crankshaft nut	15 ~ 20	kg-m	(108.5 ~ 144.6	ft.lb.)
Cylinder head bolt	8 ~ 9	kg-m	(57.9 ~ 65.1	ft.lb.)
Camshaft center bolt	4.5 ~ 5.5	kg-m	(32.6 ~ 39.8	ft.lb.)
Spark plug	3 ~ 4	kg-m	(21.7 ~ 28.9	ft.lb.)
Oil filter center bolt	2.8 ~ 3.2	kg-m	(20.3 ~ 23.2	ft.lb.)
Water pump blind plug	1.5 ~ 2	kg-m	(10.9 ~ 14.5	ft.lb.)
Carburetor bowl set screw	0.15~0.2	kg-m	(1.1 ~ 1.4	ft.lb.)
Rocker cover securing screw	0.33~0.4	kg-m	(2.4 ~ 2.9	ft.lb.)

LIQUID PACKING APPLICATION

1. Cylinder block.
   - Oil gallery blind plug
   - Expansion plug
   - Gas breather guide
   - Rear bearing cap fitting surface
   - Rear bearing cap side seal both ends
2. Cylinder head.
   - Expanision plug.
   - Rubber plug (Rear).
   - Manifold heat pipe.
3. Chain cover gasket both sides.
4. Cylinder head gasket (Cylinder block side).
5. Intake manifold.
   - Control valve.
   - Angle tube connector.
6. Oil pump
   - Block installing surface near to oil exit.
7. Rocker cover.
   - Tapping screw of buffle plate installing.

SPECIFICATION

a) Valve mechanism

Valve clearance (cold)	In.	0.25	mm	(0.0098 in.)
	Ex.	0.25	mm	(0.0098 in.)
	(Hot)	(Reference value)		
	In.	0.28	mm	(0.011 in.)
	Ex.	0.28	mm	(0.011 in.)
Valve head diameter	In.	42	mm	(1.654 in.)
	Ex.	35	mm	(1.378 in.)
Valve stem diameter	In, Ex.	8	mm	(0.3150 in.)
Valve length	In.	116.4	mm	(4.58 in.)
	Ex.	117.2	mm	(4.61 in.)
Valve lift		9.0	mm	(0.354 in.)
Valve spring free length	Outer	42.5	mm	(1.673 in.)
	Innter	41.4	mm	(1.630 in.)
Valve spring loaded length	Outer	29.0	mm	(1.142 in.)
	Innter	26.0	mm	(1.024 in.)
Valve spring assembling height	Outer	37.0	mm	(1.457 in.)
	Innter	34.0	mm	(1.339 in.)
Valve spring effective wind number	Outer	4.5	mm	(0.1772 in.)
	Innter	6.25	mm	(0.2461 in.)

Valve spring wire diameter	Outer	4.2	mm	(0.1654 in.)
	Innter	2.9	mm	(0.1142 in.)
Valve spring coil diameter	Outer	27.5	mm	(1.083 in.)
	Inner	19.9	mm	(0.733 in.)
Valve guide length	In.	48	mm	(1.890 in.)
	Ex.	60	mm	(2.362 in.)
Valve guide height from cylinder head	In, Ex.	16.7	mm	(0.657 in.)
Valve guide inner diameter	In, Ex.	7	mm	(0.2756 in.)
Valve guide outer diameter	In, Ex	14.2	mm	(0.559 in.)
Valve guide to stem clearance	In.		0.025 ~ 0.055 mm (0.0010 ~ 0.0022 in.)	
	Ex.		0.04 ~ 0.077 mm (0.0016 ~ 0.0030 in.)	
Valve guide interference fit	In, Ex.		0.040 ~ 0.069 mm (0.0016 ~ 0.0027 in.)	
Max. tolerance of above clearance	In, Ex.	0.1	mm	(0.0049 in.)
Valve seat width	In, Ex.		2.05 ~ 2.33 mm (0.0807 ~ 0.0917 in.)	
Valve seat angle	In, Ex.		90°	

b) Camshaft and timing chain

Camshaft end play		0.07 ~ 0.148 mm (0.0028 ~ 0.0058 in.)	
Cam height	36.53	mm	(1.438 in.)
Camshaft journal diameter		37.45 ~ 37.475 mm (1.474 ~ 1.475 in.)	
Camshaft bend	0.01	mm	(0.0004 in.)
Camshaft bearing inner diameter		37.5 ~ 37.525 mm (1.476 ~ 1.477 in.)	
Camshaft journal to bearing clearance		0.025 ~ 0.075 mm (0.0008 ~ 0.0030 in.)	

c) Connecting rod

Center distance	140	mm	(5.51 in.)
Big end end play		0.110 ~ 0.246 mm (0.0043 ~ 0.0097 in.)	
Connecting rod bearing clearance	0.05	mm	(0.0020 in.)
Connecting rod bend		0.03 ~ 0.06 mm (0.0012 ~ 0.0024 in.)	

Connecting rod bearing under size

Bearing size	Bearing thickness	Crank pin diameter
S.T.D.	1.483 ~ 1.499 mm (0.0584 ~ 0.0590 in.)	49.975 ~ 59.991 mm (1.967 ~ 1.968 in.)
25 U.S.	1.609 ~ 1.622 mm (0.0633 ~ 0.0639 in.)	49.725 ~ 49.741 mm (1.9576 ~ 1.9582 in.)
50 U.S.	1.734 ~ 1.747 mm (0.0683 ~ 0.688 in.)	49.475 ~ 49.491 mm (1.9477 ~ 1.9483 in.)
75 U.S.	1.857 ~ 1.872 mm (0.0731 ~ 0.0737 in.)	49.225 ~ 49.241 mm (1.938 ~ 1.939 in.)
100 U.S.	1.984 ~ 1.997 mm (0.081 ~ 0.0786 in.)	48.975 ~ 48.991 mm (1.928 ~ 1.929 in.)

d) Crankshaft and main bearing

Journal taper and out of round	Less than	0.01	mm	(0.0004 in.)
Crankshaft free end play		0.060 ~ 0.192 mm (0.0024 ~ 0.0008 in.)		
Wear limit of ditto clearance		0.3	mm	(0.0118 in.)
Crank pin taper and out of round	Less than	0.01	mm	(0.0004 in.)
Main bearing clearance		0.03 ~ 0.06 mm (0.0012 ~ 0.0024 in.)		
Wear limit of ditto clearance		0.1	mm	(0.0039 in.)

Main bearing under size

Bearing size	Bearing thickness	Crank-journal diameter
S.T.D.	2.485 ~ 2.505 mm (0.0978 ~ 0.0986 in.)	55.971 ~ 55.990 mm (2.2036 ~ 2.2043 in.)
25 U.S.	2.612 ~ 2.625 mm (0.1028 ~ 0.1033 in.)	55.721 ~ 55.740 mm (2.194 ~ 2.195 in.)
50 U.S.	2.737 ~ 2.750 mm (0.1078 ~ 0.1083 in.)	55.471 ~ 55.490 mm (2.184 ~ 2.185 in.)
75 U.S.	2.862 ~ 2.875 mm (0.1127 ~ 0.1132 in.)	55.221 ~ 55.240 mm (2.174 ~ 2.175 in.)
100 U.S.	2.987 ~ 3.000 mm (0.1176 ~ 0.1181 in.)	54.971 ~ 54.990 mm (2.164 ~ 2.165 in.)

Crankshaft bend	Less than	0.02	mm	(0.0008 in.)

e) Piston

Piston diameter		84.968 ~ 85.0 mm (3.345 ~ 3.346 in.)
Ellipse-difference		0.4 mm (0.0157 in.)
Ring grove width	Top	2.0 +0.05 +0.03 mm (0.0787 +0.0020 +0.0012 in.)
	Second	2.0 +0.03 +0.01 mm (0.0787 +0.0012 +0.0004 in.)
	Oil	4.0 +0.03 +0.01 mm (0.1575 +0.0012 +0.0004 in.)
Piston to bore clearance		0.035 ~ 0.55 mm (0.0014 ~ 0.0022 in.)
Piston ring side clearance	Top	0.04 ~ 0.08 mm (0.0016 ~ 0.0031 in.)
	Second	0.02 ~ 0.06 mm (0.0008 ~ 0.0024 in.)
	Oil	0.02 ~ 0.06 mm (0.0008 ~ 0.0024 in.)
Ring gap	Top	0.35 ~ 0.55 mm (0.0138 ~ 0.0217 in.)
	Second	0.3 ~ 0.5 mm (0.0118 ~ 0.0197 in.)
	Oil	0.35 ~ 0.55 mm (0.0138 ~ 0.0217 in.)
Ring height	Top	2 -0.01 -0.03 mm (0.0787 -0.0004 -0.0012 in.)
	Second	2 -0.01 -0.03 mm (0.0787 -0.0004 -0.0012 in.)
	Oil	4 -0.01 -0.03 mm (0.1575 -0.0004 -0.0012 in.)
Piston pin interference fit of piston pin to piston		0 ~ 0.09 mm (0 ~ 0.0035 in.)
Clearance between piston pin and connecting rod bushing		0.003 ~ 0.013 mm (0.0001 ~ 0.0005 in.)
Piston pin outer diameter		21.991 ~ 22.0 mm (0.8658 ~ 0.8661 in.)
Piston pin hole diameter of piston		21.987 ~ 21.996 mm (0.8656 ~ 0.8660 in.)
Connecting rod bushing inner diameter		21.995 ~ 22.008 mm (0.8659 ~ 0.8664 in.)

TROUBLE DIAGNOSES AND CORRECTIONS

Trouble	Cause	Correction
I. Noisy engine		
Knocking of crankshaft and bearing	Loose main bearing.	Replace.
	Burnt bearing.	Replace.
	Bent of crankshaft.	Repair or replace.
	Uneven wear of journal.	Regrinding.
	Too much end play of crankshaft.	Replace center bearing.
Piston and connecting rod knocking	Loose bearing.	Replace.
	Burnt bearing.	Replace.
	Loose piston pin.	Replace pin or bushing.
	Loose piston in cylinder.	Recondition cylinder.
	Broken piston ring.	Replace.
	Connecting rod alignment is not made.	Disassemble, and repair or replace.
Camshaft knocking	Loose bearing.	Replace.
	Too big axial play.	Replace bearing thrust plate.
	Rough teeth of gears.	Repair.
	Broken cam gear.	Replace.
Timing chain noise	Chain tension not adequate.	Adjust.
	Wear and damage of chain.	Replace.
	Wear of sprocket.	Replace.
	Wear or breakage of tension adjusting mechanism.	Replace.
	Clearance of camshaft and bearing too big.	Replace.
Camshaft and valve mechanism knocking	Valve clearance not correct.	Adjust.
	Wear of adjusting screw.	Replace.
	Wear of rocker face.	Replace.
	Loose valve stem in guide.	Replace guide.
	Yielded valve spring.	Replace.
	Burning of valve.	Mention later part.
Water pump knocking	End play of shaft.	Replace.
	Broken impeller.	Replace.

Trouble	Cause	Correction
II. Other mechanical trouble		
Sticked valve	Not correct valve clearance.	Adjust.
	Small clearance of valve stem with guide.	Clean stem or ream the guide.
	Yielded or broken valve spring.	Replace.
	Biting or damage of valve stem.	Replace or clean.
	Bad fuel.	Use good fuel.
Burnt valve seat	Not correct valve clearance.	Adjust.
	Yielded valve spring.	Replace.
	Thin valve head edge.	Replace valve.
	Narrow valve seat.	Refacing.
	Overheat.	Mentioned
	Over speed.	Drive right.
	Sticked valve guide.	Repair.
Exceseive wear of cylinder and piston	Shortage of engine oil.	Check every day.
	Dirty engine oil.	Clean crankcase, replace oil filter element.
	Inadequate oil.	Use right oil.
	Overheat.	Mentioned.
	Wrong assembly of piston with connecting rod.	Repair or replace.
	Not correct clearance of piston ring.	Adjust.
	Broken piston ring.	Replace.
	Dirty air cleaner.	Clean periodically.
	Too rich mixture.	Adjust.
	Engine over run.	Drive right.
	Sticked choke valve.	Clean and adjust.
	Overchoking.	Start correct way.
Defective connecting rod	Shortage of engine oil.	Check oil daily.
	Low oil pressure.	Refer.
	Not adequate engine oil.	Use right oil.
	Rough surface of crankshaft.	Grind and replace bearing.
	Clogged oil passage.	Clean.
	Wear or eccentricity of bearing.	Replace.

Defective connecting rod	Wrong assembly of bearing.	Repair.
	Loose bearing.	Replace.
	Connecting rod alignment is not made.	Repair or replace.
Defective crankshaft bearing	Shortage of engine oil.	Check every day.
	Low oil pressure.	Mentioned.
	Not adequate engine oil.	Use right oil.
	Wear or out of round of crankshaft journal.	
	Clogged oil passage in crankshaft.	Clean.
	Wear or eccentricity of bearing.	Replace.
	Wrong assembly of bearing.	Repair.
	Not concentric crankshaft or bearing.	Replace.

SERVICE JOURNAL OR BULLETIN REFERENCE

DATE	JOURNAL or BULLETIN No.	PAGE No.	SUBJECT

DATSUN 1800

SERVICE MANUAL

MODEL G18

ENGINE

NISSAN MOTOR CO., LTD.

TOKYO, JAPAN

SECTION EL

ENGINE LUBRICATION SYSTEM

EL

LUBRICATION SYSTEM EL-1

LUBRICATION SYSTEM

CONTENTS

DESCRIPTION EL-1
LUBRICATION CIRCUIT EL-2
OIL PUMP EL-2
Description EL-2
Removal EL-2
Installation EL-2
Disassembly EL-2
Inspection and repair EL-3
Assembly EL-3
OIL PRESSURE RELIEF VALVE EL-3
Specification of relief valve EL-4
OIL FILTER EL-4
Disassembly EL-5
Inspection EL-5
Assembly EL-5
OIL WARNING SWITCH EL-5

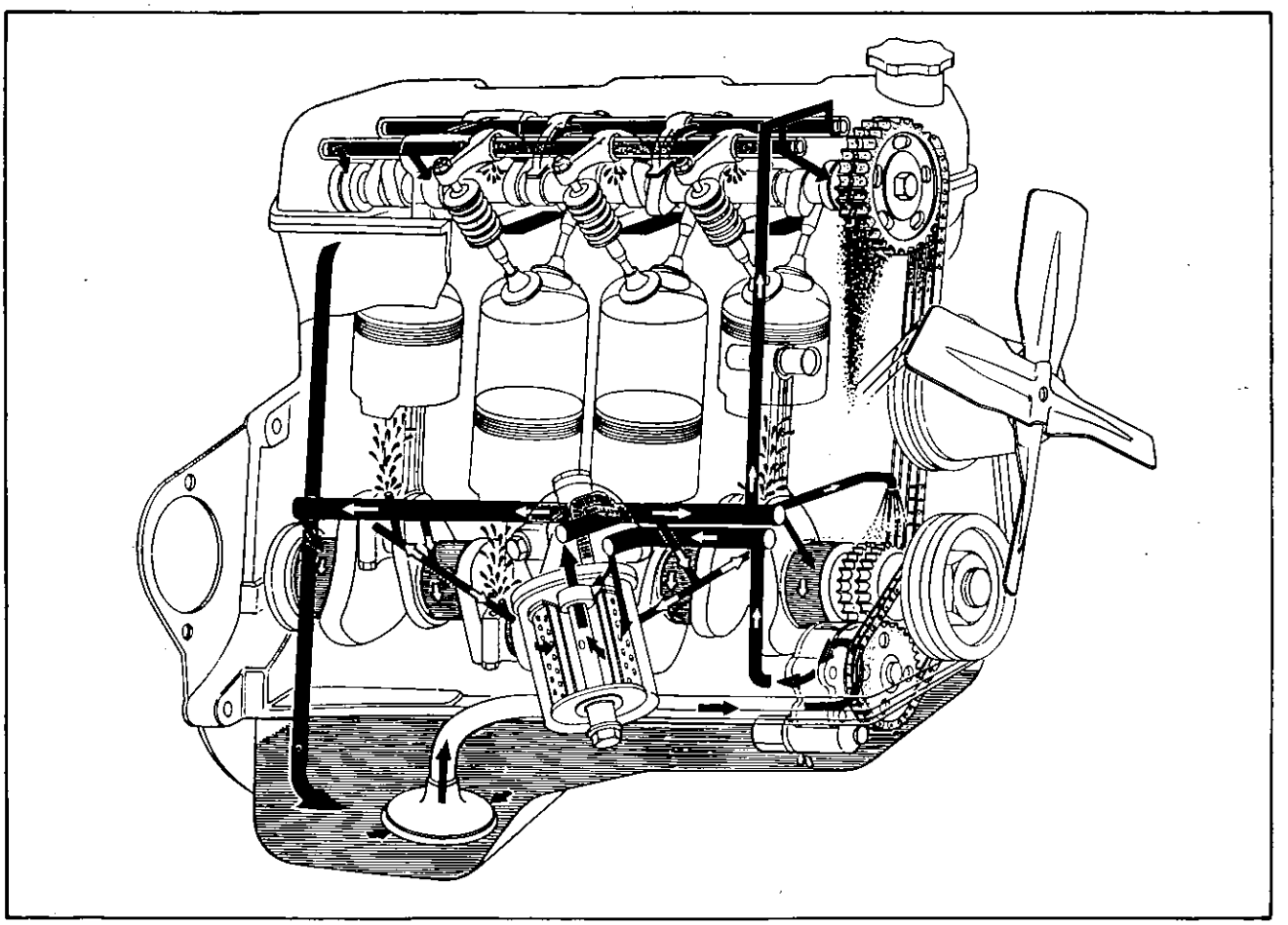

Fig. EL-1 Lubrication circuit (G18 engine)

DESCRIPTION

The lubricating system is Pressure - feed type system and is composed of highly efficient functional components suited for high performance, i.e. high out-put and high speed running.

LUBRICATION CIRCUIT

Oil is drawn from the oil pan through the inlet screen and tube to the inlet side of the oil pump, then delivered by oil pump through the oil gallery to the inlet side of the full flow oil filter and to the main oil gallery.

The main oil gallery supplies oil to the crankshaft main bearings and drilled passages in the crankshaft direct oil from main bearings to connecting rod bearings.

Oil injected from jet holes on connecting rods lubricates the cylinder walls and piston pins.

The oil distributed from the cylinder block front oil gallery lubricates the timing chain through the jet located near the chain.

Furthermore lubricant is supplied to cylinder head main oil gallery (rocker shaft) through the camshaft bracket, and the camshaft bearing on the cylinder head are fed directly from this gallery. The rocker arm and valve are lubricated by the oil through the rocker arm gallery from the cylinder head main oil gallery (rocker shaft).

OIL PUMP

Description

The oil pump assembly is installed to the cylinder block by four bolts and driven by the rotor chain in the crankshaft. The oil pump is a gear type. The oil pressure is regulated by the regulator valve to 4.55 to 4.85 kg/cm^2 (65.4 to 74.0 lb./sq.in.).

Removal

1. Drain engine oil.

2. Remove the distributor.

3. Remove the cylinder head assembly, fan belt, crankshaft pulley and oil pan.

4. Remove the chain cover with oil flinger.

5. Remove the oil pump sprocket with the oil pump crankshaft sprocket and the oil pump drive chain.

6. Remove the oil pump body by removing four oil pumps attaching bolts.

Installation

Installation is a reversal of removal procedure.

In this case, adjust the tension of the oil pump drive chain as shown in Figure EL-2.

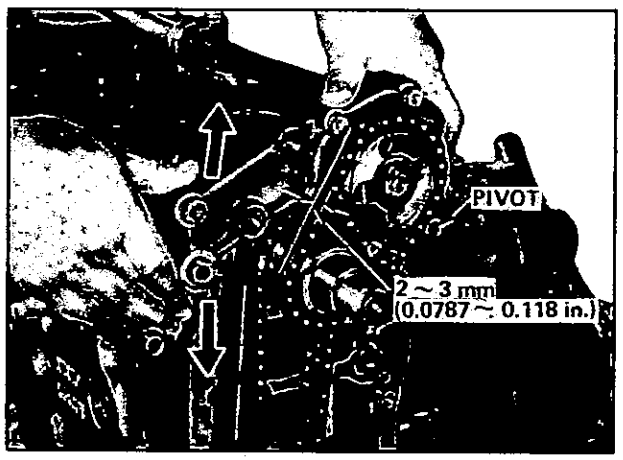

Fig. EL-2 Tensioning oil pump drive chain

Disassembly

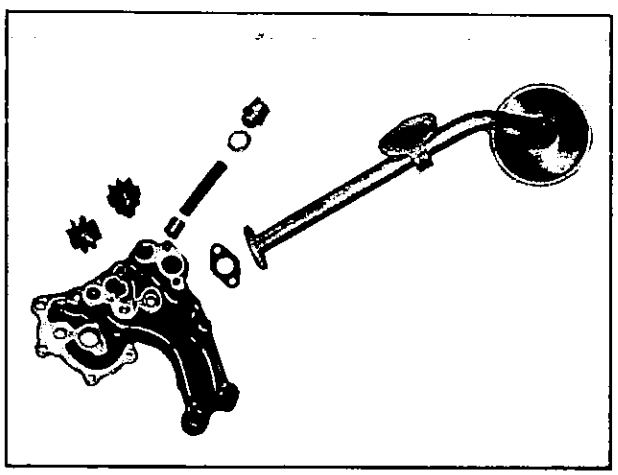

Fig. EL-3 Disassembly of oil pump

1. Separate the body cover from the oil pump

body by unscrewing four securing bolts, and take out the drive gear assembly and idler gear from the pump body.

2. Take out the valve and spring by removing the relief valve plug.

Inspection and repair

1. Clean the disassembled parts with cleaning solvent.

2. Inspect the drive shaft for excessive wear and scores.

3. Check the following.

Gear backlash	0.1 ~ 0.5 mm (0.0039 ~ 0.0195 in.)
Side clearance between gear and body	0.016 ~ 0.15 mm (0.0006 ~ 0.0059 in.)
Clearance between drive shaft and body	0.016 ~ 0.1 mm (0.0006 ~ 0.0039 in.)
Clearance between drive shaft and body cover	0.02 ~ 0.1 mm (0.00078 ~ 0.0039 in.)
Clearance between idler gear and idler shaft	0.016 ~ 0.1 mm (0.0006 ~ 0.0039 in.)

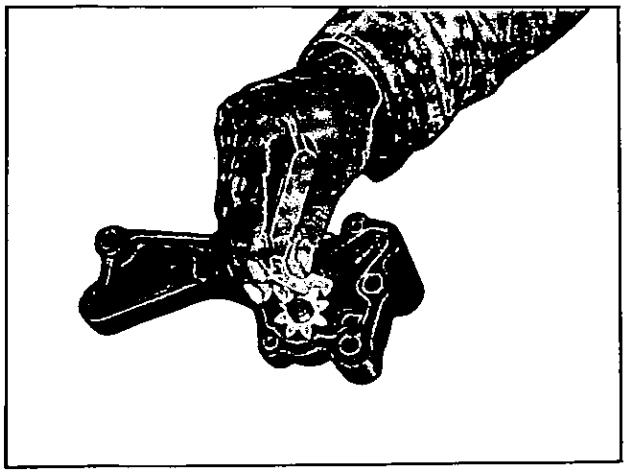

Fig. EL-4 Inspection of backlash

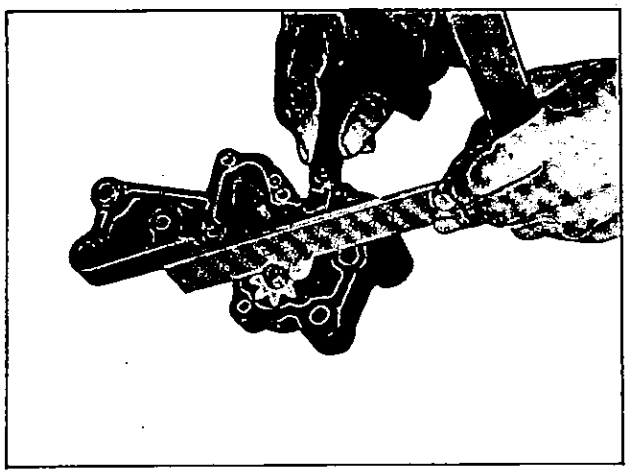

Fig. EL-5 Inspection of clearance

Assembly

1. Assembly is a reversal of disassembly procedure.

2. In this case, the mark dotted on gear should be faced to the oil pump body cover.

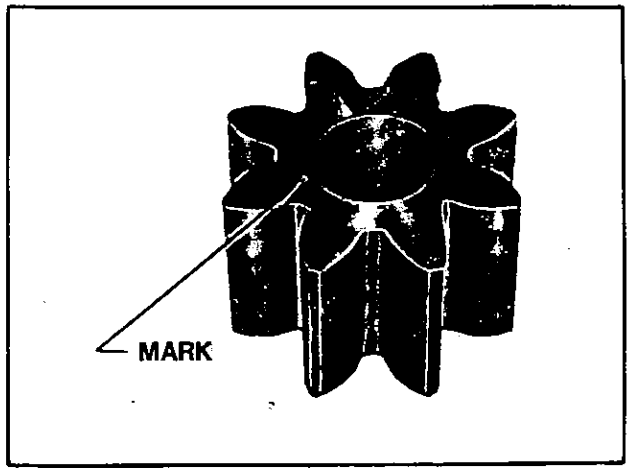

Fig. EL-6 Dotted mark of pump gear

OIL PRESSURE RELIEF VALVE

The oil pressure relief valve is not adjustable. At the released position, the valve permits that oil is by-passed through a passage on the pump body to the oil pan.

Check the relief valve spring dimension to ensure that it has not lost its tension.

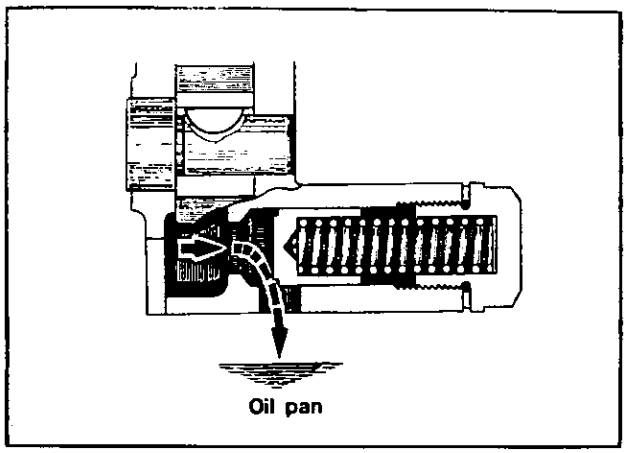

Fig. EL-7 Relief valve

Specification of relief valve

Free length of spring	64.0 ~ 66.0 mm (2.51 ~ 2.60 in.)
Pressured length of spring	50 mm at 7.8 ~ 9.7 kg (1.96 in. at 17.2 ~ 21.4 lbs.)
Opening pressure	4.55 ~ 4.85 kg/cm^2 (64.7 ~ 69.0 lbs/sq. in.)

OIL FILTER

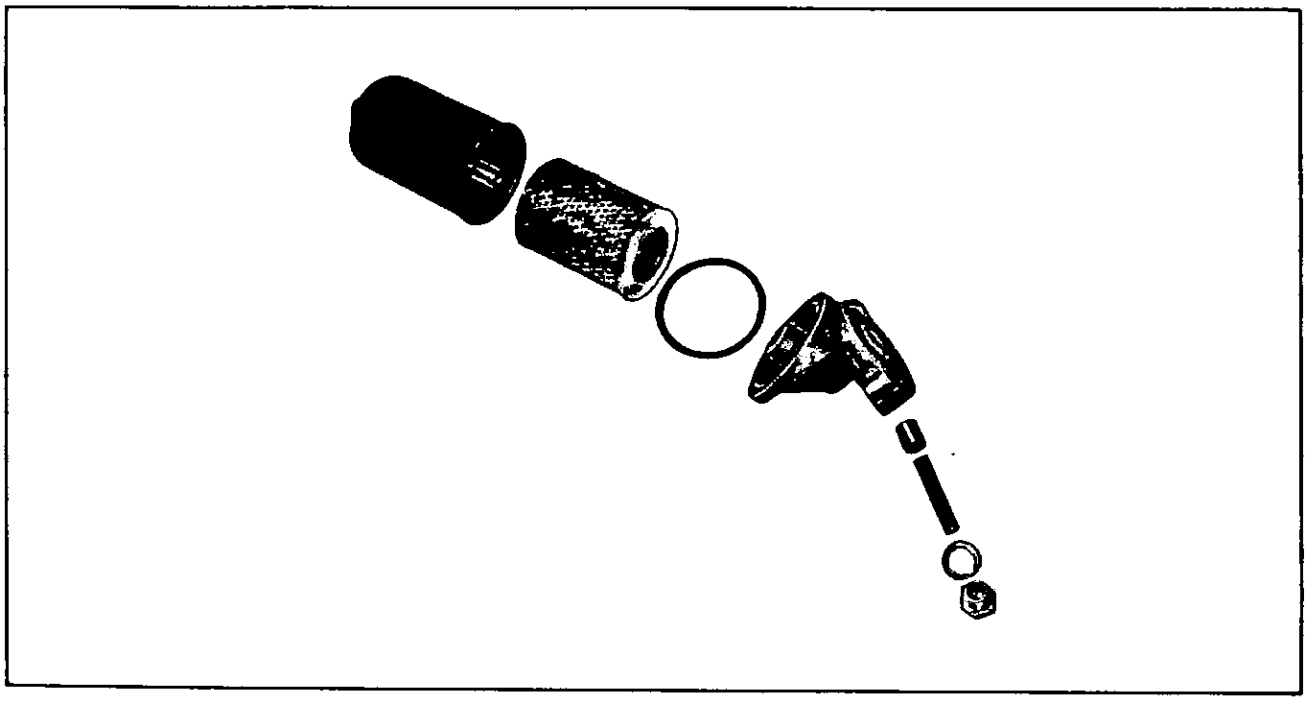

Fig. EL-8 Oil filter

Oil filter is of full flow type and the element is replaceable which is mounted to the cylinder block at the right hand side by two bolts.

The oil fed by oil pump is filtered by oil filter and supplied to main gallery.

Filter element is set between the element set spring and the retainer.

The filter body is mounted to the filter cover by center shaft. The oil by-pass valve is located in the filter cover.

If the pressure difference between inlet and outlet of oil filter reaches 0.8 kg/cm^2 (11.38 lb./sq. in.) by clogging of filter element, the released valve permits oil to be by-passed, then

the pressure of oil supplied to main gallery is kept at specified level. It avoids the engine trouble caused by pressure dropping.

Disassembly

1. Loosen the oil filter center shaft and separate the cover and body.

2. Take off upper retainer, element, lower retainer and set spring from the body.

3. Remove by-pass valve plug from the cover and draw off valve washer, valve spring and valve in sequency.

Inspection

Check the by-pass valve spring according to the following specifications

Free length ..... 54.5 ~ 56.0 mm (2.14 ~ 2.20 in.)
Pressured length ..... 49.0 mm (1.93 in.)

Assembly

Assembly is a reversal of disassembly procedure.

Note: a. When tightening the filter body to the cover by center bolt, tighten with the specified torque 2.8 to 3.2 m-kg (20.25 to 23.15 lb./sq.in.).

b. The oil filter body gasket and center shaft gasket should be replaced with new one in case of reassembling.

OIL WARNING SWITCH

The oil warning switch is located on right hand center of cylinder block and wired to an indicator lamp in the instrument cluster.

The low pressure light glows whenever the oil pressure drops below 0.5 kg/cm^2 (7.11 lb./sq. in.).

SERVICE JOURNAL OR BULLETIN REFERENCE

DATE	JOURNAL or BULLETIN No.	PAGE No.	SUBJECT

SERVICE JOURNAL OR BULLETIN REFERENCE

DATE	JOURNAL or BULLETIN No.	PAGE No.	SUBJECT

DATSUN 1800

SERVICE MANUAL

MODEL G18

ENGINE

NISSAN MOTOR CO., LTD.

TOKYO, JAPAN

SECTION CO

COOLING SYSTEM

CO

COOLING SYSTEM CO-1

COOLING SYSTEM

CONTENTS

DESCRIPTION CO-1
WATER PUMP CO-2
Removal CO-2
Disassembly CO-2
Inspection CO-2
FLUID-COUPLING CO-3
Lubrication CO-3
THERMOSTAT CO-3
Removal CO-3
Inspection CO-4
Installation CO-4
RADIATOR CO-4
Removal CO-5
Inspection CO-5
SPECIFICATIONS CO-5

DESCRIPTION

The cooling system is a closed pressure type with high cooling capability. Cooling water flowing through resistance-free water passages in the cylinder head and block is maintained at adequate temperature range at all times by means of an ample capacity water pump, of a corrugated fin type radiator with high cooling efficiency and a pellet type thermostat.

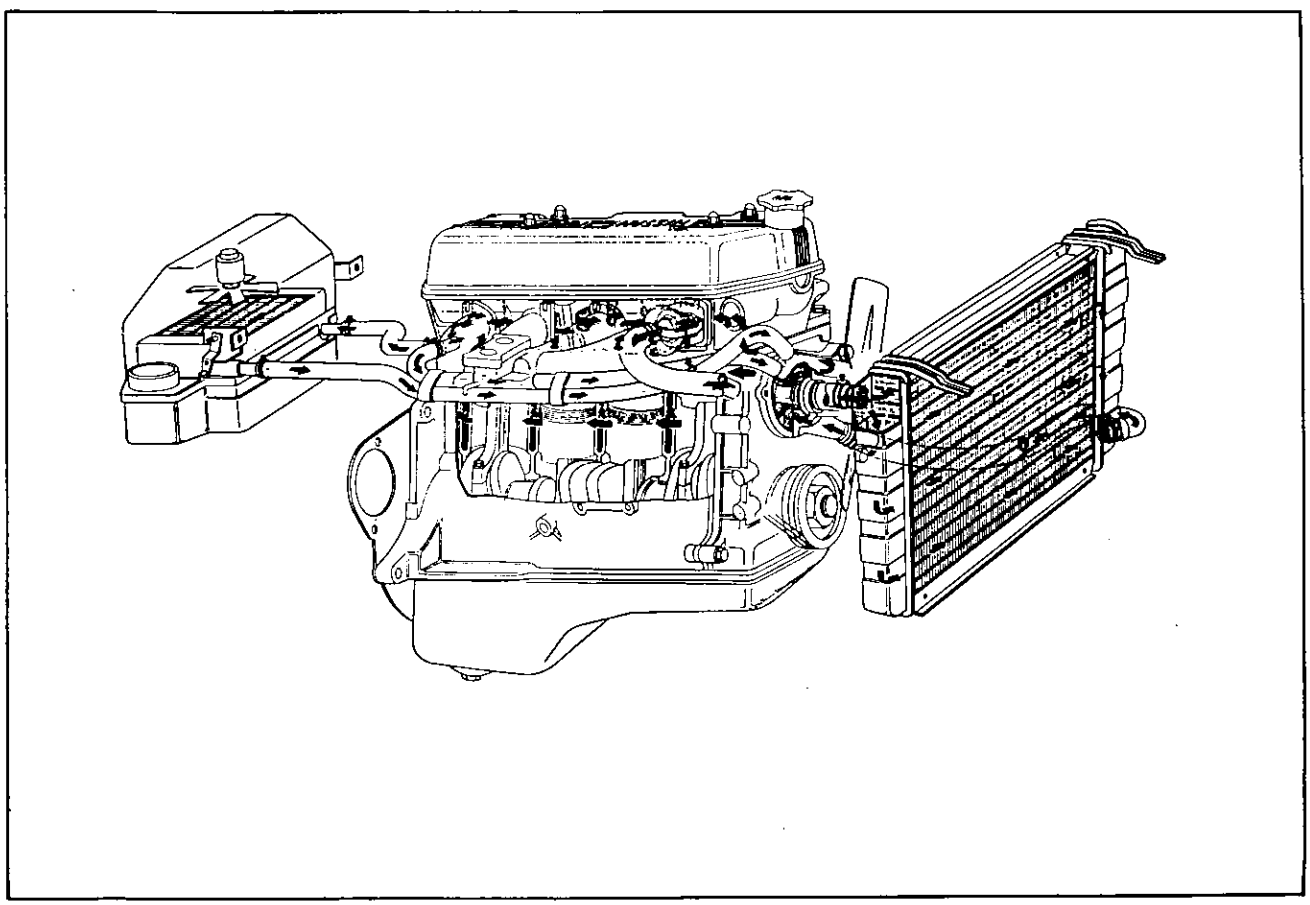

Fig. CO-1 Cooling system (G18 engine)

WATER PUMP

The water pump is a centrifugal water pump with an aluminum diecast pump body. The volute chamber is built into the chain cover assembly and a high pressure sealing mechanism is adopted to prevent the water leakage and noise thoroughly.

The water pump with fluid coupling will be equipped for the models with the torque convertor or the air conditioner and for U. S. A. models.

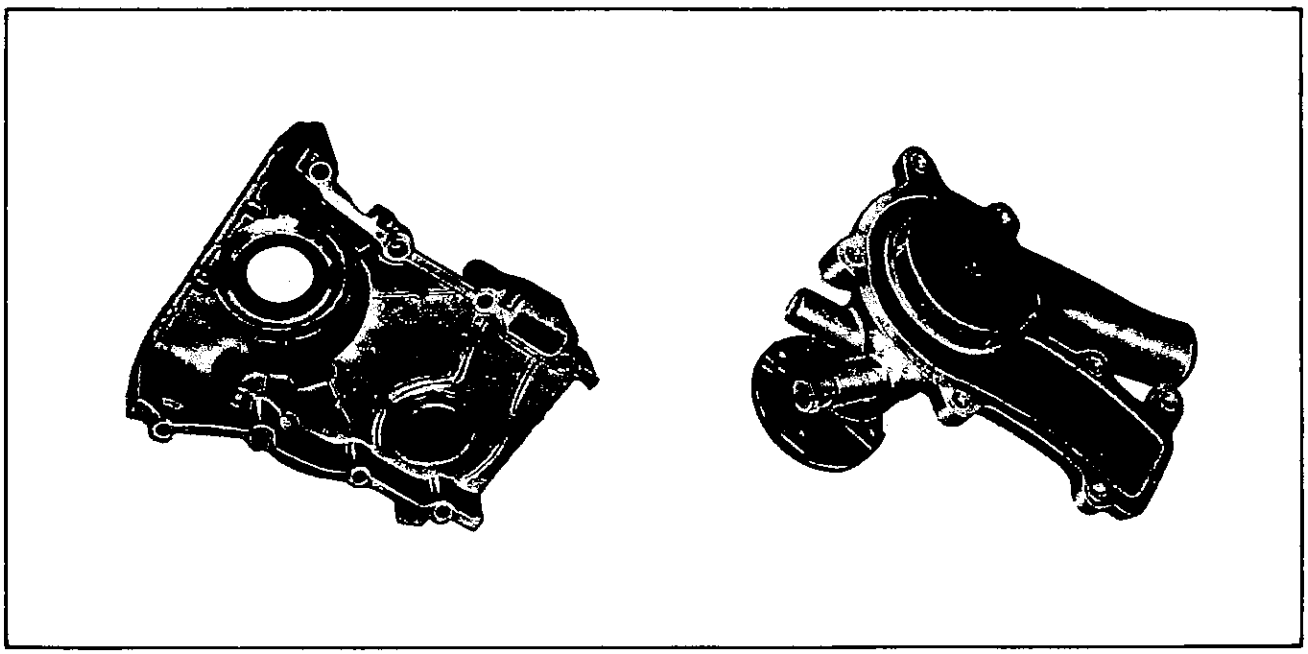

Fig. CO-2 Water pump and chain cover

Removal

1. Drain cooling water completely.
2. Take the fan belt off the pulley.
3. Remove fan and pulley.
4. Remove the water pump.

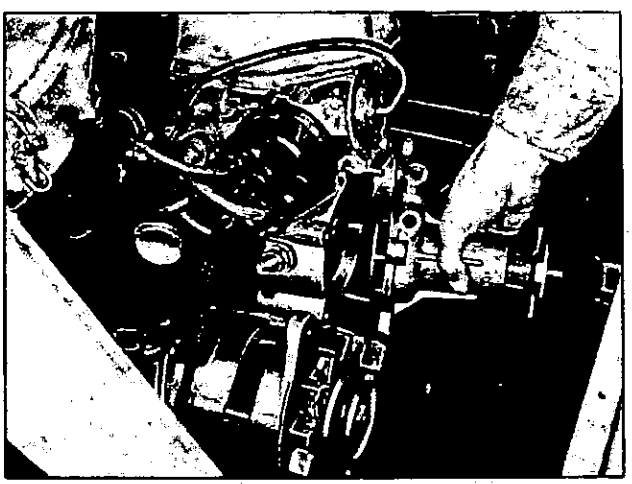

Fig. CO-3 Water pump removal

Disassembly

By reason of an aluminum make, the water pump body is preferably not to be disassembled.

Inspection

Pump body

- o Replace it if it has badly rusted or corroded vanes.
- o Replace it if it grows up excessive bearing noise or squeak with the engine running.

Note: To prevent a squeak, use Nissan CSP (Cooling System Protector).
Prior to installing the pump, clean it with Nissan CSC (Cooling System Cleaner).

FLUID-COUPLING

In the models with the torque converter or the air conditioner and the U.S.A. models a fluid coupling is combined with the water pump to maintain cooling efficiency and to prevent power loss at high speed operation.

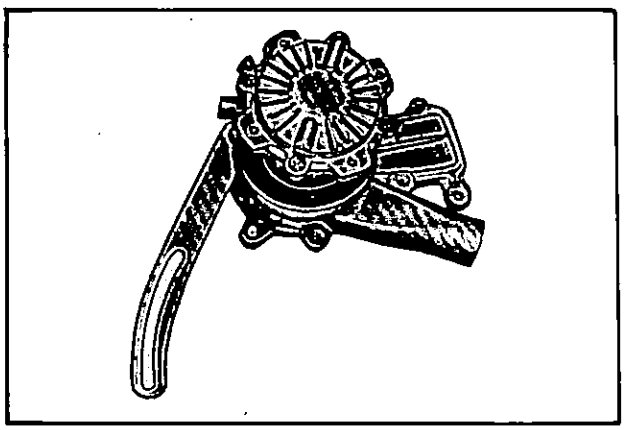

Fig. CO-4 Fluid coupling

1. If a malfunction due to foreign matters, or sticking due to deteriorated oil are detected, disassemble the coupling for interior cleaning.

Note: Wash the coupling in gasoline, in this case take care so that rubber seal will be kept away from gasoline.

2. Check for seizure and a "gelatinized" oil (a phenomenon of oil thickened into a semi-solid form). Change such oil because thickened oil will make bearings and grooves sticky. At the same time, examine the condition of seal and bearing thoroughly. A blackened seal and bearing due to seizure requires the replacement of the pump body assembly.

Lubrication

Silicon oil is to be used.

1. If a malfunction and oil leakage are detected in the fluid coupling, remove the water pump for an overhaul. After reassembly, it must be filled with silicon oil of exactly 11.5 c.c. (0.702 cu.in.) using an injection syringe.

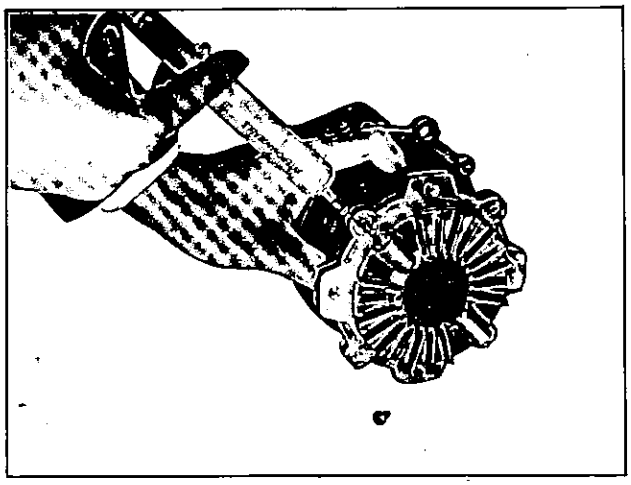

Fig. CO-5 Fluid-coupling lubrication

Note: Carry out oil injection slowly to help air escape.
A binding agent to be used in assembling:

- Three-Bond No. 1
In this type of water pump, oil can be replenished with the coupling installed in the engine.
The quantity of oil to be replenished must not exceed 5 c.c. (0.305 cu.in.).

THERMOSTAT

A pellet type thermostat is used in the water outlet passage to control the flow of coolant, providing fast engine warm-up and regulating coolant temperatures. A wax pellet in the thermostat expands when heated and contracts when cooled. The pellet is connected through a piston to a valve and when the pellet is heated, pressure is exerted against a diaphragm with forces to open the valve. As the pellet is cooled, the contraction allows a spring to close the valve.

Removal

1. Drain cooling water.

2. Remove radiator hose.

3. Remove water outlet. Then, take out the thermostat.

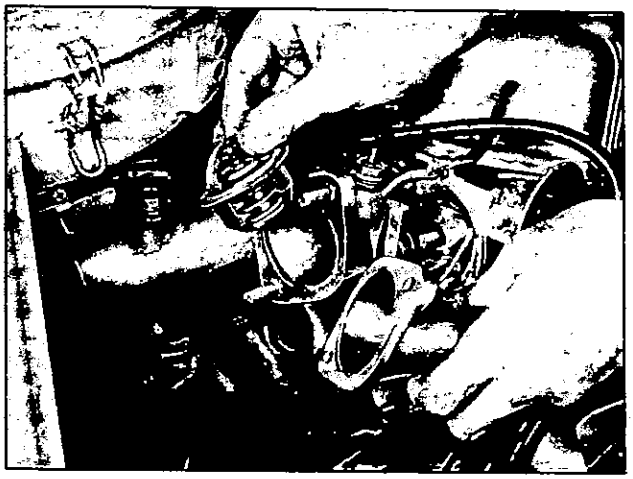

Fig. CO-6 Thermostat removal

Inspection

To test the thermostat for proper operating temperature, submerge the unit in a container of water. Heat the water and observe the temperature.

1. Measure the temperature when the thermostat valve just starts rising.

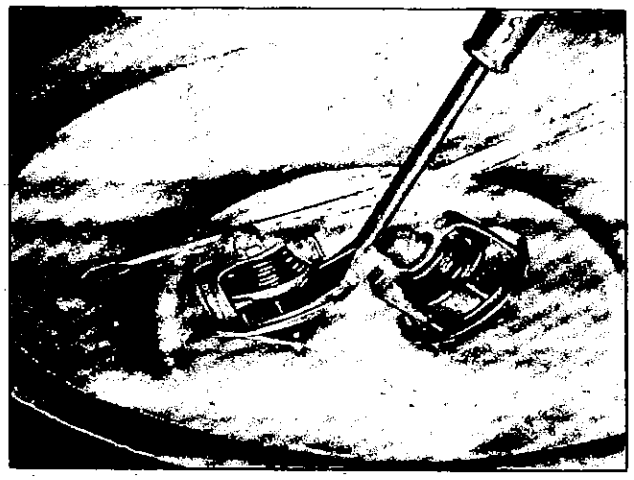

Fig. CO-7 Thermostat inspection

Provide a screwdriver with a marking at a point about 8 mm (0.315 in.) from the tip.

Inspect by inserting the marked screwdriver at 90°C (194°F).

2. Measure the maximum lift of the thermostat valve.

Valve open temperature: 80° C ± 1.5° C (176° F ± 2.7° F)

Max. valve lift: above 8 mm at 90° C (0.315 in. at 194° F)

Installation

1. In installing, apply binding agent (Three-Bond) to both sides of the packing for prevention of water leakage.

2. Install by the removal procedure in reverse.

RADIATOR

The radiator is a conventional side flow type with sight glass.

The system is pressurized and the relief valve, incorporated in the radiator filler cap, controls the pressure at approximately 0.9 kg/cm^2 (12.8 lb./sq. in.).

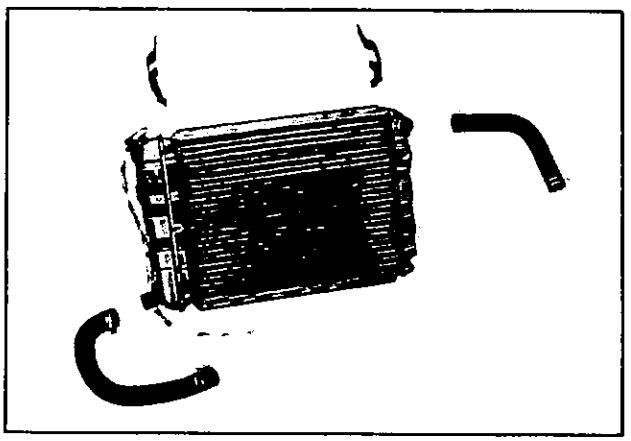

Fig. CO-8 Radiator removed

For the models with torque converter the oil cooler to cool the torque converter oil will be combined with the radiator.

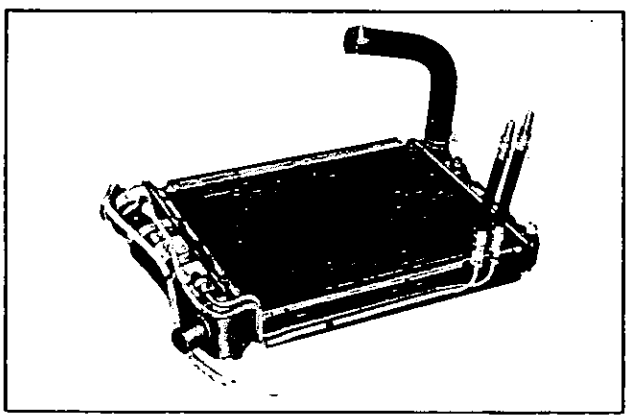

Fig. CO-9 Radiator with oil cooler

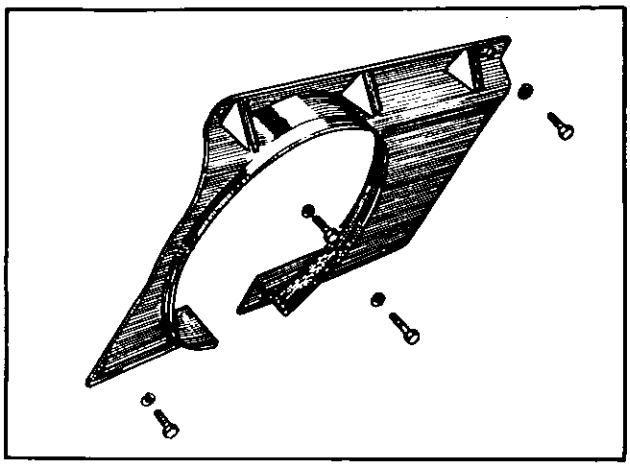

Fig. CO-10 Radiator shroud

Also, the radiator shroud is combined with the radiator in the models with the torque converter or the air conditioner and the U.S.A. model.

Removal

1. Drain cooling water.

2. Disconnect the radiator upper hose, and lower hose.

3. Detach the radiator assembly by removing the four fixing bolts.

4. Sight glass can be removed by turning counter-clockwise to clean it.

Inspection

If the radiator requires frequent top-ups, the trouble must be traced to one of the following causes:

1. Excessive water evaporation from overheating as a result of a clogged radiator. --- Clean the radiator.

2. Defective safety valve on radiator filler cap. --- Replace the cap.

3. Loose hose clamps. --- Tighten clamps.

4. Leaky water pump shaft seal. --- Replace the water pump.

SPECIFICATIONS

Dimensions of radiator core (height × width × thicknees)	334 × 465 × 38 mm (13.15 × 18.31 × 1.50 in.)
Type	Corrugated fin type
Radiator fin spacing	2.3 mm (0.091 in.)
Cap working pressure	0.9 kg-cm2 (12.8 lb./sq. in.)
Water capacity	3.1 ℓ (3.3 U.S. quart.)

SERVICE JOURNAL OR BULLETIN REFERENCE

DATE	JOURNAL or BULLETIN No.	PAGE No.	SUBJECT

DATSUN 1800

SERVICE MANUAL

MODEL G18

ENGINE

NISSAN MOTOR CO., LTD.

TOKYO, JAPAN

SECTION EF

FUEL SYSTEM

EF

AIR CLEANER ..... EF -1
FUEL STRAINER ..... EF -1
FUEL PUMP ..... EF -2
CARBURETOR ..... EF -8

AIR CLEANER

DESCRIPTION

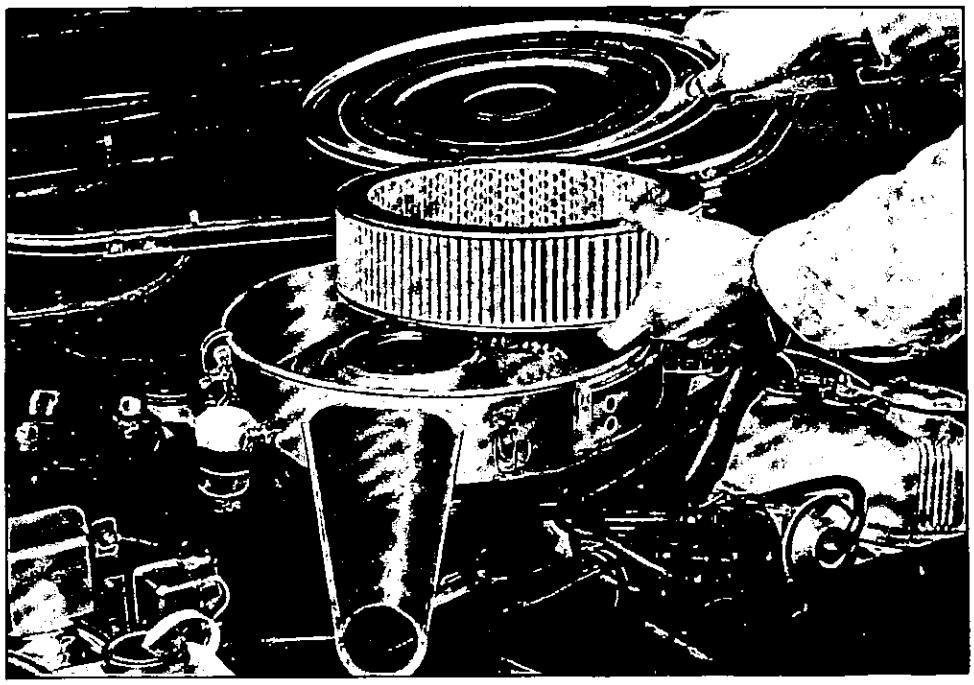

Fig. EF-1 Air cleaner for single carburetor of G18 engine

The air filter element used is viscous paper type element and does not require any cleaning ragardless of contamination until it is replaced at every 40,000 km (24,000 miles) of operation.

Note: Never treat the element by brushing or air blasting before the time for replacement!

FUEL STRAINER

DESCRIPTION

The fuel strainer is of the cartridge type. A fiber mat is used as a strainer element. This strainer should be replaced at intervals not to exceed 40,000 km (24,000 miles).

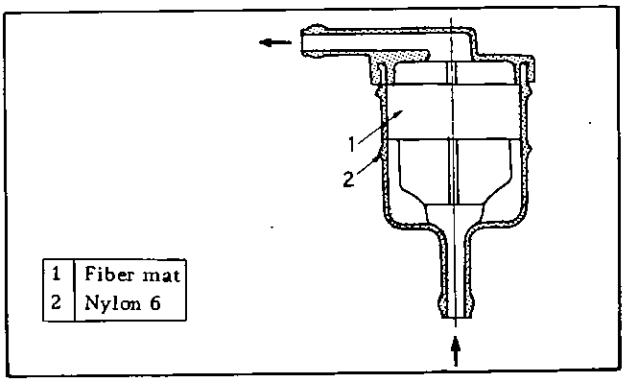

Fig. EF-2 Sectional view of cartridge type fuel strainer

REMOVAL

Disconnect the inlet and outlet fuel pipes, and the fuel strainer assembly is easily removed.

SERVICE REFERENCE

This fuel strainer has no pet cock, therefore the strainer, carburetor lines, and fuel pump should not be removed or cleaned when the tank is full, unless absolutely necessary. If required, place the tube, at the rear of the strainer, above the top of the fuel tank.

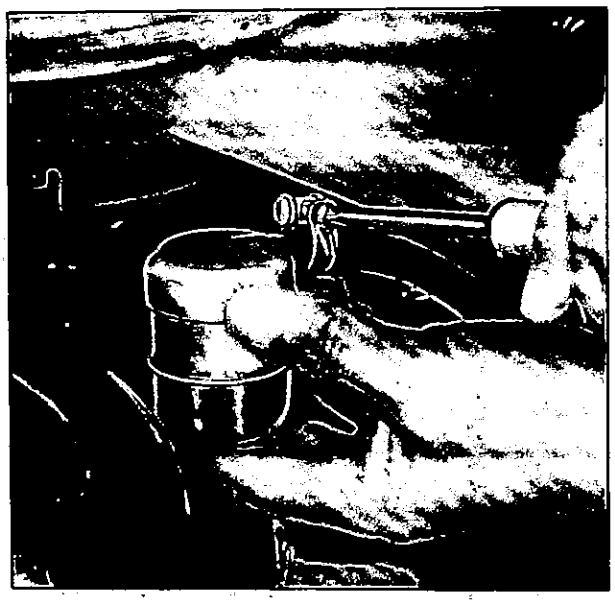

Fig. EF-3 Cartridge type fuel strainer

FUEL PUMP

CONTENTS

DESCRIPTION EF-2
CONSTRUCTION EF-3
OPERATION EF-4
TESTING EF-6
TROUBLE DIAGNOSES AND CORRECTIONS EF-6
REMOVAL EF-7
DISASSEMBLY EF-7
INSPECTION EF-7
ASSEMBLY AND INSTALLATION EF-7

DESCRIPTION

The fuel pump is of the electric type consisting of a contact mechanism, solenoid relay, pump mechanism and a strainer unit.

This is located in the center of the spare wheel house in the trunk compartment.

This electric pump presents several distinct features as follows.

1. No vapor lock in torrid zones.
2. Starts pumping immediately as the ignition switch is turned on.
3. Built-in type filter keeps dust out and adds to pump and engine life.
4. Reduced power consumption.

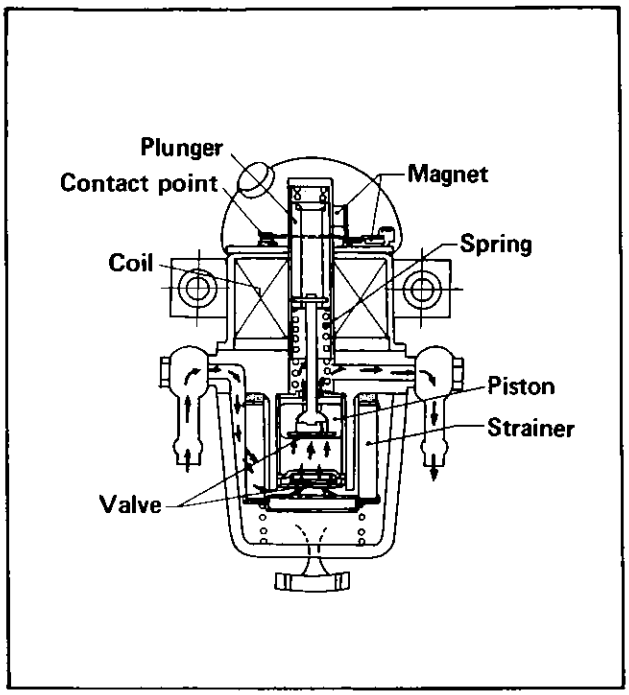

Fig. EF-4 Electric fuel pump

CONSTRUCTION

The type EP-3 fuel pump consists of a contact mechanism, solenoid relay, pump mechanism and a strainer unit. Its details are as follows.

1. Contact mechanism

In the contact mechanism, as shown in Figure EF-5, magnet A ② and B ③ are attached to each end of a L-shaped magnet holder ①. The magnet holder is mounted on a relay stay ④ by means of a hinge ⑤ in such a way that, along with vertically reciprocating motion of a plunger, located inside a cylinder ⑨ indicated by the dotted line, the holder makes an oscilating motion in the direction of the arrow as shown. Accompanying with the oscilating motion of the magnet holder, a point arm ⑥ attached to the horizontal part of the magnet holder moves up and down so that the contact A ⑦ attached to its end will come into contact B ⑧ fixed on the relay stay ④ to make switching.

The arc suppressing resistor and condenser are connected in parallel to the contacts A and B.

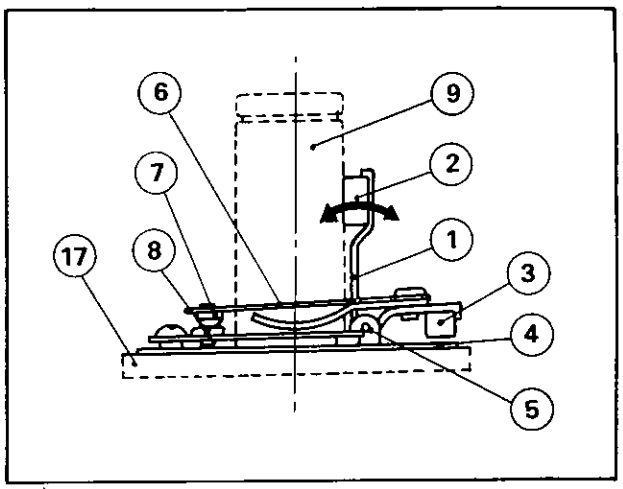

Fig. EF-5 Contact mechanism

2. Solenoid relay

The solenoid relay is constructed as illustrated in Figure EF-6. Inside the brass cylinder ⑨ the hollow iron plunger ⑩ which at its lower part is connected to a piston ⑫ by means of a connecting rod ⑪ can freely slide and is attached so that it is pushed up between a damper spring ⑮ above and a plunger spring ⑭ below mounted on the frame ⑬. Encircling this cylinder ⑨ a driving coil ⑯ is mounted concentrically and the coil ⑯ is surrounded by a leakage type solenoid relay covered by iron yokes ⑰ and an end yoke ⑱.

An arc suppressing resistor ⑲ is connected in parallel to the driving coil.

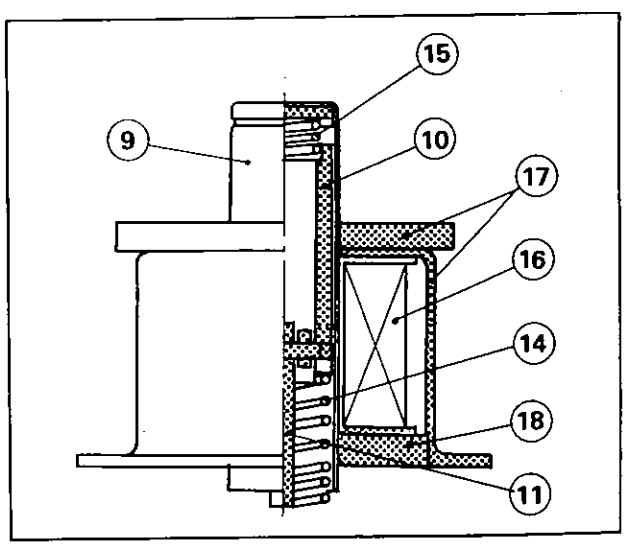

Fig. EF-6 Solenoid relay

3. Pump mechanism

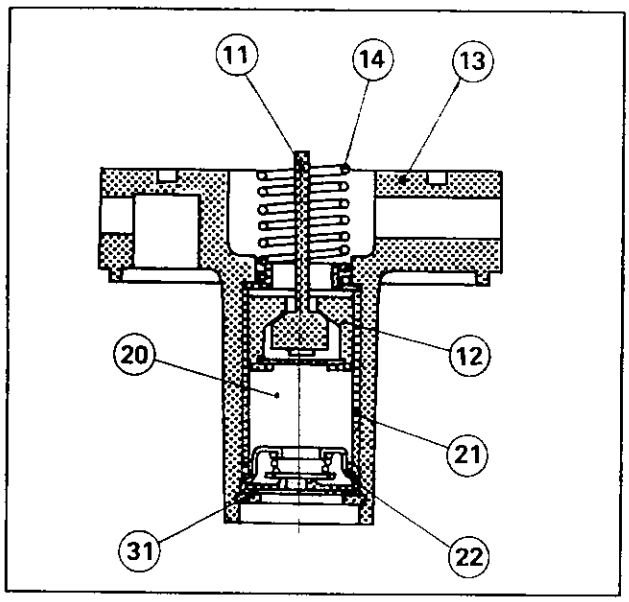

Fig. EF-7 Pump mechanism

As shown in Figure EF-7, the piston ⑫ is connected to the plunger ⑩ through the connecting rod ⑪ .
It is mounted in the cylinder B ㉑ fitted in the central hole ⑳ of the frame so that it can slide freely. An inlet valve ㉒ is provided at the lower end.

4. Strainer unit

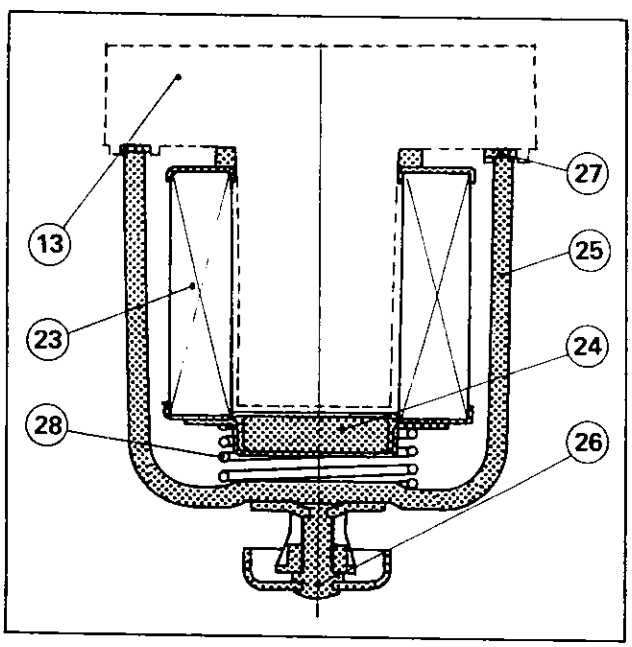

Fig. EF-8 Fuel strainer

This unit is constructed as shown in Figure EF-8. Around the frame ⑬ a wire netting filter ㉓ is attached concentrically and on the under side of the lower end of the frame a magnet C ㉔ is mounted to remove any fine iron filings. Enclosing the filter ㉓ , a glass strainer ㉕ is fixed on the frame ⑬ by a band ㉖ using the seal packing ㉗ .

OPERATION

1. Operation of electromagnetic unit

Before operating the fuel pump, as the plunger ⑩ stays pushed up inside the cylinder ⑨ by the plunger spring ⑭ mounted on the frame ⑬ , the magnet A ② on the end of the magnet holder ① of the contact mechanism is attracted to the cylinder and the point arm ⑥ mounted on the horizontal part of the magnet holder ① is pressed downward making contact between contacts A ⑦ and B ⑧ .

(1) When turning the engine switch A on, the electric current flows from the battery ㉙ → driving coil ⑯ → contact B ⑧ → contact A ⑦ → point arm ⑥ → yoke ⑰ → ground and this current makes the driving coil ⑯ act as an electromagnet. Then the plunger ⑩ is attracted downward against the plunger spring ⑭ and given potential energy by the plunger spring pressure.
As the plunger ⑩ moves down, the distance between the plunger ⑩ and the magnet A ② increases and the attractive force of the magnet A ② becomes zero. Thus the attractive force working between the magnet B ③ and the yoke ⑰ becomes predominant, drawing the magnet B ③ to the yoke ⑰ and disconnect the contacts A ⑦ and B ⑧.

(2) When the contacts A ⑦ and B ⑧ are separated, the driving coil ⑯ loses its electromagnetic force and the plunger ⑩ is gradually pushed up to the position held prior to the operation by the potential energy of the plunger spring pressure. When the plunger reaches the position held prior to the operation, the distance between the plunger ⑩ and the magnet A ② decreases, the contacts A ② is drawn to the plunger ⑩ and the contacts A ⑦ and B ⑧ becomes connected, that is it returns to the original state as described above.

Thereafter, this process is repeated and the plunger ⑩ carries on a regular reciprocating motion while the engine switch A remains on.

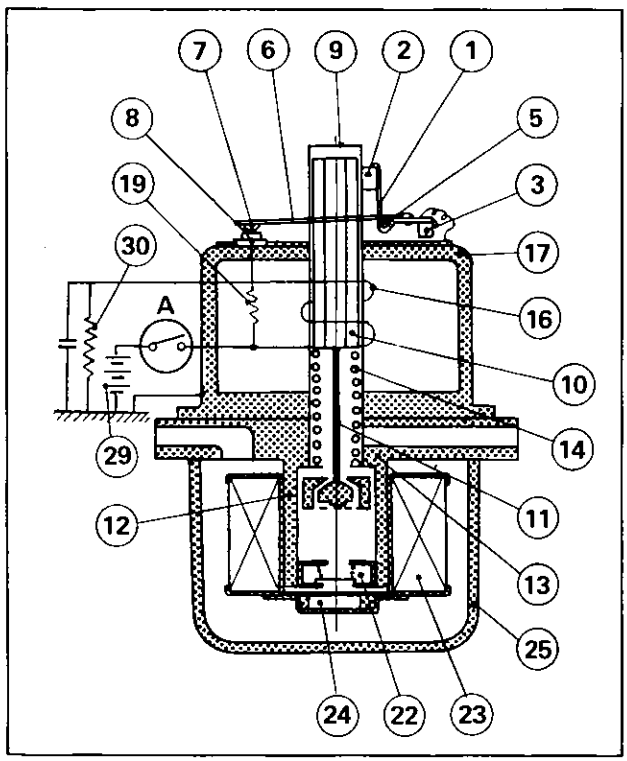

Fig. EE-9 Operational principle

2. Operation of pump unit

As described above in respect of the operation of the electromagnetic unit, the fuel pump utilizes the power of the electromagnet and the force of the plunger spring in the opposite direction of the power and owing to these forces the piston continues the reciprocating motion.

(1) Turning the engine switch A on makes the piston ⑫ connected to the plunger ⑩ drop very quickly against the pressure of the plunger spring ⑭. In this movement the upper portion of the inside wall of the piston ⑫ becomes open due to the reaction to its very fast drop as shown in Figure EF-10 and the inlet valve ㉒ closes and therefore the fuel contained between the piston ⑫ and the inlet valve ㉒ moves upward.

(2) The piston ⑫ lowered is given potential energy by the plunger spring pressure and goes up gradually to the position held prior to the operation as the contacts A ⑦ and B ⑧ becomes disconnected. Then, as shown in Figure EF-11, the opening at the upper portion of the piston closes as the its upper inside wall contacts with the spherical surface of the connecting rod, and the inlet valve opens, thus allowing the fuel flow into the cylinder simultaneously with its discharge.
These processes (1) and (2) are repeated continuously.

Note: The number of operations of the fuel pump is governed by the fuel quantity contained inside the carburetor. When the carburetion is empty, the pump discharges the fuel at its full rate. As the fuel quantity increases in the carubretion, the needle valve operates to close, the pressure rises up and thus the discharge decreases, that is, the number of the pump operations is reduced. After the needle valve becomes closed, the discharge almost stops. Then the number of the pump operation is one per five or six seconds.

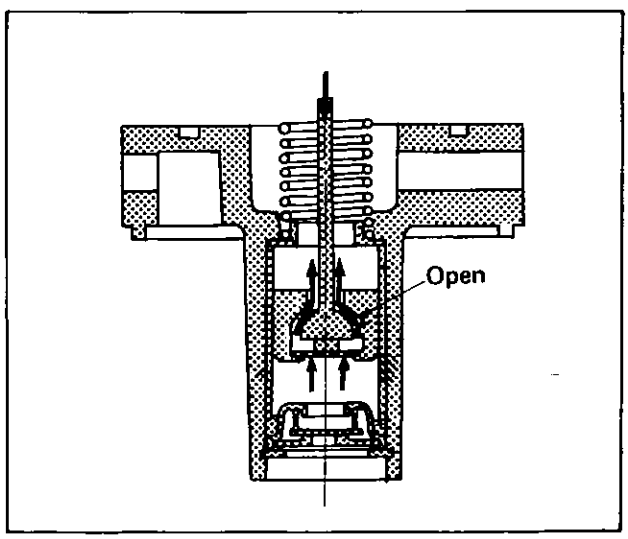

Fig. EF-10 Pump operation

TESTING

1. Disconnect the fuel hose at the pump outlet.

2. Connect a suitable hose (approximately 6 mm

(0.0236 in.) inner diameter] to the pump outlet.

Note: If the diameter is too small, the following proper delivery capacity can not be obtained even if the pump functions properly.

3. With the hose outlet in the higher position than the pump, operate the pump and check the delivery capacity for more than 15 seconds.

4. The capacity should be 1,400 c.c. (3.24 U.S. pts.) in one minute or less.

If no gasoline, or only a little flows from open end of the pipe with the pump operated, or if the pump does not work, follow the following diagnosis.

TROUBLE DIAGNOSIS AND CORRECTIONS

When a fuel pump is found to be faultly, check it in the following procedure.

1. Remove the fuel pump from the vehicle.

2. Connect the fuel pump to a battery properly charged, and operate it to see if the pump discharges fuel.

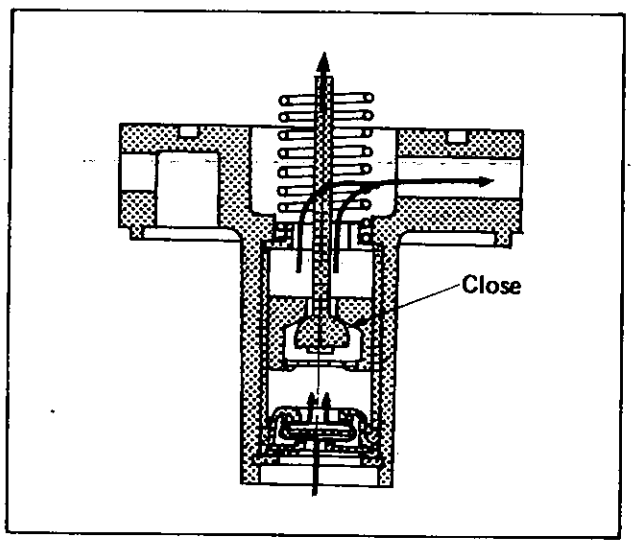

Fig. EF-11 Pump operation

(1) When the fuel pump operates and discharges fuel.

In this case, the cause of the trouble does not lie in the fuel pump but in some other unit. Check other units for possible causes as follows.

* Voltage drop of battery
* Poor grounding
* Poor grounding of battery
* Incorrect or loose wiring
* Incorrect connection of inlet or outlet or clogged piping
* Trouble in carburetor

(2) When the fuel pump does not operate and discharge fuel

In this case, the cause of the trouble lies in the pump. Check it as follows.

* If the current flows (this will be indicated by sparks at the terminal)

The cause is the plunger or piston binding in motion. Therefore, disassemble the pump and remove any dust inside.

* If the current does not flow.

The cause is the breaking of a coil or lead wire. Therefore replace the fuel pump with a new unit.

(3) When the fuel pump discharges only a small quantity of fuel.

The cause is trouble in the inlet valve, discharge valve, the malfunction of packings or choking of filter mesh. Therefore disassemble the pump and make the necessary servicing.

REMOVAL

1. Remove two bolts retaining fuel pump cover to floor panel.

2. Remove two bolts retaining fuel pump to fuel pump cover.

3. Disconnect the lead wire.

4. Disconnect fuel hoses.

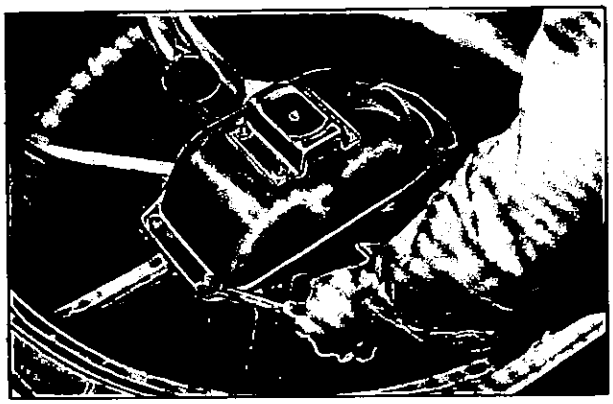

Fig. EF-12 Fuel pump cover removal

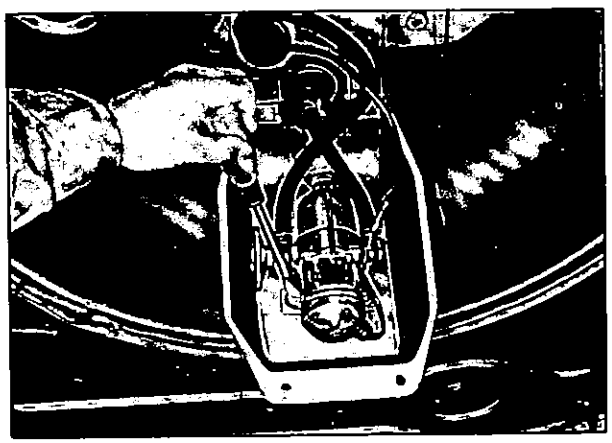

Fig. EF-13 Fuel pump removal

DISASSEMBLY

1. Loosen the screws of the locking band.

2. Remove the strainer, strainer spring, filter, strainer seal and locking band.

3. Remove the snap ring.

4. Remove the four screws of the yoke and take off the electric unit.

5. Gently press down the plunger and remove the inlet valve, packing, cylinder and plunger assembly.

Note: The electric unit cannot be disassembled, since it is sealed. If it is defective, it must be replaced as a complete unit.

INSPECTION

1. Wash the strainer, filter and gasket with clean gasoline and blow dust off with a blast of air. When cleaning the parts, check the filter and gasket. If defective, replace it.

Note: Filter must be cleaned every 20,000 km (24,000 miles).

2. Wash the plunger, piston and inlet valve with clean gasoline and blow dust off with a blast of air. Check the smooth operation of the cylinder and piston. If it is noted defective replace them.

3. Insert the plunger assembly into the cylinder of the electric unit. Move the assembly up and down. If a clutter sound is heard, it indicates the contacts are normally operated. If not, it shows that the electric unit is defective, and must be replaced.

ASSEMBLY AND INSTALLATION

Follow the disassembly and removal procedure in reverse. Replace the gaskets if necessary.

CARBURETORS

CONTENTS

DESCRIPTION ..... EF- 8
STRUCTURE AND OPERATION ..... EF- 8
Primary system ..... EF- 8
Secondary system EF-11
Float system EF-14
ADJUSTMENT EF-14
Idling adjustment EF-14
Fuel level adjustment EF-14
Adjustment of starting interlock valve opening EF-15
Adjustment of interlock opening of primary and secondary throttle valve EF-16
Adjustment of the injection amount of the accelerating pump (D3034C carburetor) EF-16
MAJOR SERVICE OPERATIONS EF-17
Removal EF-17
Disassembly EF-17
Cleaning and inspection EF-20
Assembly and installation EF-21
JETS EF-21
TROUBLE DIAGNOSES AND CORRECTIONS EF-21
SPECIFICATIONS AND SERVICE DATA EF-23

DESCRIPTION

The carburetors are of the two barrel down draught type. Model DAK 340 is of the solex type manufactured by the HITACHI.

Model D3034C is of the strongburg type manufactured by the NIHON KIKAKI and installed on the exhaust emission control engine.

Each carburetor has two variations for manual and automatic transmissions.

Carburetor model	Application
DAK340-1A	Manual transmission
DAK340-2A	Automatic transmission
D3034C-1B	Exhaust emission control engine with manual transmission
D3034C-2B	Exhaust emission control engine with automatic transmission

STRUCTURE AND OPERATION

These carburetors consist of the primary system for normal running and the secondary system for full load running. The float system which the primary and secondary systems use in common, the secondary switch over mechanism, the starting mechanism, accelerating mechanism, etc. are incorporated.

For model D3034C carburetor, the power valve mechanism is provided to make high speed drive better, a fuel cut-off valve is attached to cut fuel supply when the ignition key is switched off, and a idle limitter is also provided to control the emissions under a certain level. So that the movement of the idle adjust screw is limited in a certain range.

Primary system

1. Primary main system

Fuel flows, as shown in Figures EF-14 and EF-15, through the main jet, mixing with air which comes in from the main air bleed and passes through the emulsion tube, and is pulled out into the venturi through the main nozzle. The multiholed main nozzle insures a proper atomization of fuel and a low fuel consumption.

≪Model DAK340 Carburetor≫

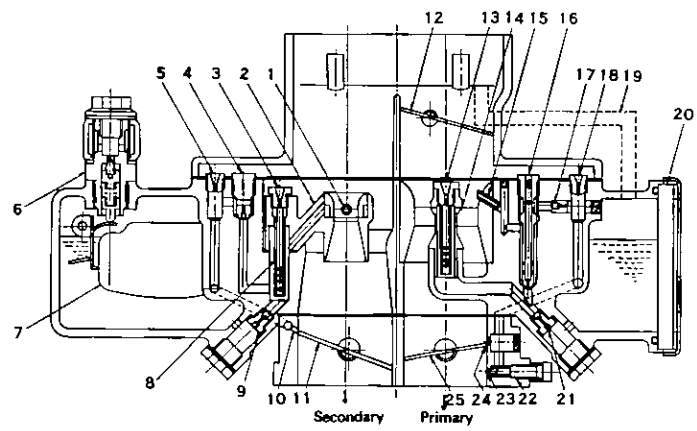

1.	S Main nozzle	6.	Needle valve	11.	S Throttle valve	16.	P Slow jet	21.	P Main jet
2.	S Small venturi	7.	Float	12.	Choke valve	17.	Slow economizer	22.	Idle limitter
3.	S Main air bleed	8.	S Emulsion tube	13.	P Main air bleed	18.	P Slow air bleed	23.	Idle hole
4.	S Slow jet	9.	S Main jet	14.	P Main nozzle	19.	Air vent	24.	P By-pass hole
5.	S Slow air bleed	10.	S By-pass hole	15.	Economizer bleed	20.	Level gauge	25.	P Throttle valve

Fig EF-14 Sectional view

≪Model D3034C Carburetor≫

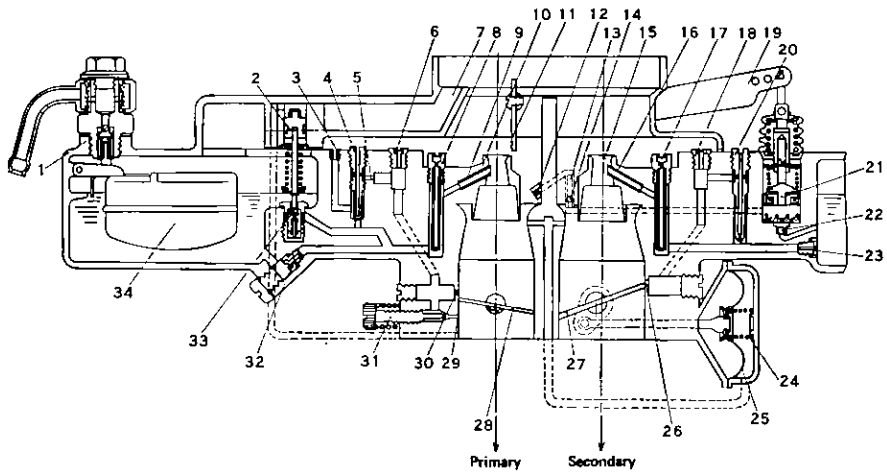

1.	Float valve	7.	Air vent	13.	Pump weight	21.	Pump plunger	28.	P Throttle valve
2.	Vacuum piston	8.	P Main air bleed	14.	Discharge check valve	22.	Inlet check valve	29.	Idle port
3.	P Slow air bleed	9.	P Main nozzle	15.	S Small venturi	23.	S Main jet	30.	Slow port
4.	Slow jet	10.	P Small venturi	17.	S Main air bleed	24.	Diaphragm spring	31.	Idle adjust screw
5.	Slow economizer	11.	Choke valve	18.	Step air bleed	25.	Diaphragm	32.	P main jet
6.	P Slow air bleed	12.	Pump nozzle	19.	Pump arm	26.	Step port	33.	Power jet
				20.	Step jet	27.	Idle port	34.	Float

Fig. EF-15 Sectional view

2. Idling and slow system

The throttle valve is opened at a small angle when idling and in slow speed running, with a large negative pressure prevailing down-stream of the fuel system. This negative pressure acts on the slow speed system equipped with a slow economizer. Through this action, fuel, measured through the jet section of the slow jet assembly located immediately behind the main jet and air coming from the economizer bleed, are mixed in the emulsion hole. This mixture is further mixed with air coming from the slow air bleed through the slow economizer and atomized. The atomized mixture is supplied to the engine from the idle hole and by-pass hole via the slow speed system line. As a result, there is an excellent linkage between the slow speed system and the main system, and the resultant stable slow speed performance is ensured.

3. Accelerating mechanism

≪ Model DAK340 Carubretor ≫

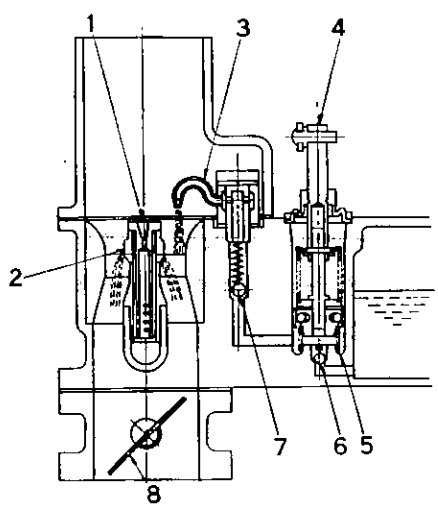

1.	Main air bleed	5.	Piston return spring
2.	Main nozzle	6.	Inlet valve
3.	Pump injector	7.	Outlet valve
4.	Piston	8.	Throttle valve

Fig. EF-16 During accelerating

The carburetor is equipped with the piston type accelerating mechanism linked to the throttle valve. When the primary throttle valve, shown in Figures EF-16 and EF-17, is closed, the piston goes up, and fuel flows from the float chamber through the inlet valve into the space under the piston. When the throttle valve is opened, the piston goes down, opening the outlet valve, and fuel is forced out through the injector. The piston return spring in the cylinder not only assures the smooth movements of the linkage but also serves to place inlet valve in position so that the piston goes down quickly and fuel is forced out through the injector.

≪ Model D3034C Carburetor ≫

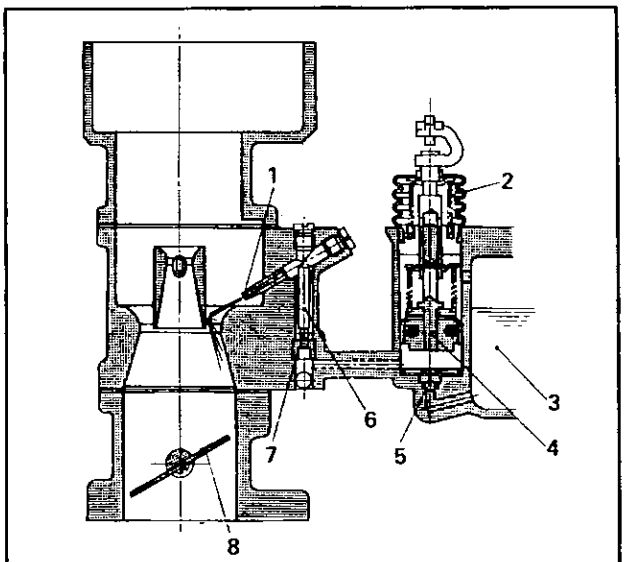

1.	Pump nozzle	5.	Inlet valve
2.	Pump return spring	6.	Valve weight
3.	Float chamber	7.	Outlet valve
4.	Pump plunger	8.	P throttle valve

Fig. EF-17 During accelerating

4. Starting mechanism

Pull the choke button to close the choke valve fully, then start the engine. This provides a rich mixture, making it possible to start the engine quickly. When the engine is started, the choke valve is opened at an adequate angle automatically, which prevents overchoking and ensures a smooth engine performance. While the engine is being warmed up, it increases in speed at steps, and by releasing the choke button an optimum engine speed can be obtained. With the choke valve closed fully, the primary throttle valve is caused to open at an angle best suited for starting through a link mechanism.

5. Dash pot mechanism

≪only for Model DAK340-2A and D3034C-2B Carburetors equipped with Automatic Transmission≫

This carburetor is equipped with a dash pot interlocked with the primary throttle valve through a link mechanism. The dash pot which is exclusively installed on cars equipped with a torque converter, is intended to prevent engine stall that would otherwise result from quick application of the brake immediately after the car ran, or from the quick release of the accelerator pedal after giving only small pressure.

When the primary throttle valve is closed near full angle (1, 800 to 2, 000 r. p. m. in engine speed), a throttle lever strikes the dash pot stem shown in Figure EF-18, making the primary throttle valve gradually open, and keeping the engine running.

Secondary system

1. Secondary main system

Fuel-air mixture produced by the functions of the main jet, main air bleed and emulsion tube, in the same manner as in the primary system, is pulled out through the main nozzle into the small venturi.

Due to the double venturi of the secondary system, the higher velocity air current passing through the main nozzle promotes the fuel atomization.

2. Step system

The construction of this system may correspond to the idling and slow system of the primary system.

The system aims in the proper filling up of the gap when fuel supply is transferred from the primary system to the secondary one. The step port is located near the secondary throttle valve in its fully closed state.

3. Secondary switch over mechanism

The secondary throttle valve is linked to the diaphragm which is actuated by the vacuum created in the venturi. A vacuum jet is provided at each of the primary and secondary venturies, and the composite vacuum of these jets actuates the diaphragm.

As the linkage, shown in Figures EF-19 and EF-21, causes the secondary throttle valve not to open until the primary throttle valve opening reaches approximately 50°, fuel consumption during normal operation is not excessive.

During high speed running, as the vacuum at the venturi is increased, the diaphragm is pulled against the diaphragm spring force, and then secondary throttle valve is opened.

The atmospheric side in the diaphragm chamber is connected to the atmosphere.

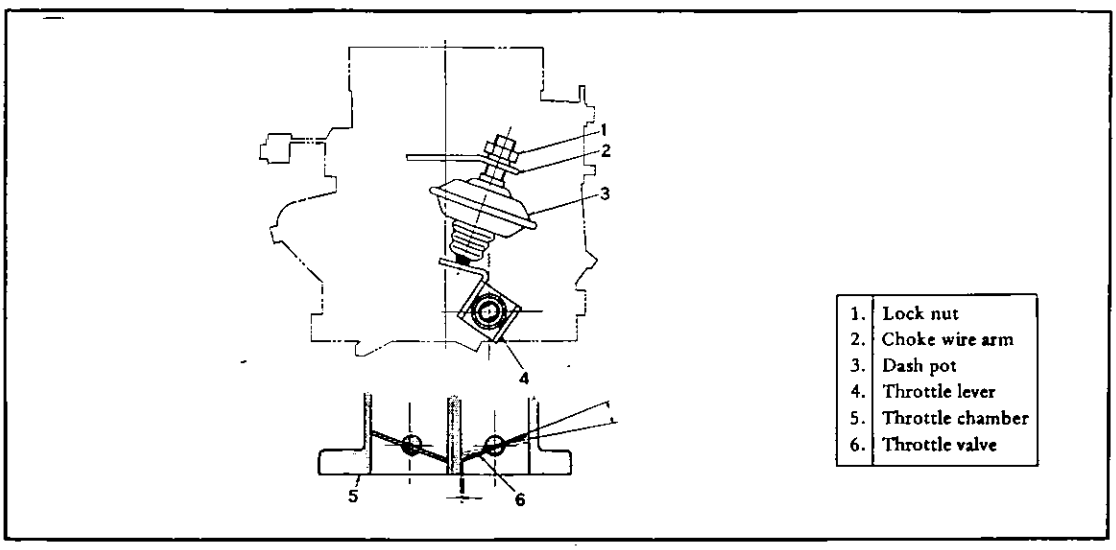

Fig. 18 Dash pot mechanism

≪Model DAK340 Carburetor≫

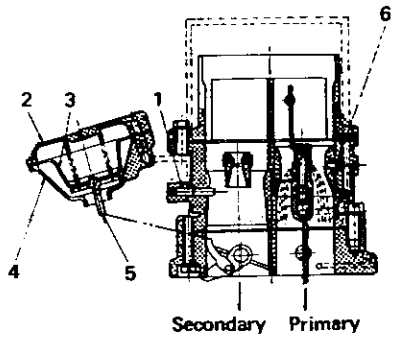

1.	S Vacuum jet	3.	Diaphragm	5.	Diaphragm rod
2.	Diaphragm chamber cover	4.	Diaphragm chamber	6.	Vacuum jet

Fig. EF-19 Full throttle at low speed

≪Model PAK340 Carburetor≫

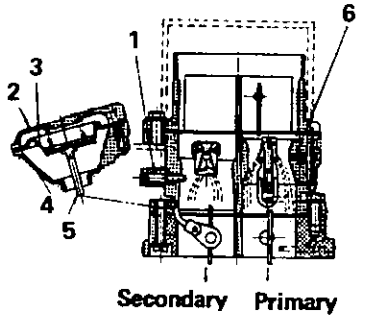

1.	S Vacuum jet	4.	Diaphragm chamber
2.	Diaphragm chamber cover	5.	Diaphragm rod
3.	Diaphragm	6.	P Vacuum jet

Fig. EF-20 Full throttle at high speed

≪Model D3034C Carburetor≫

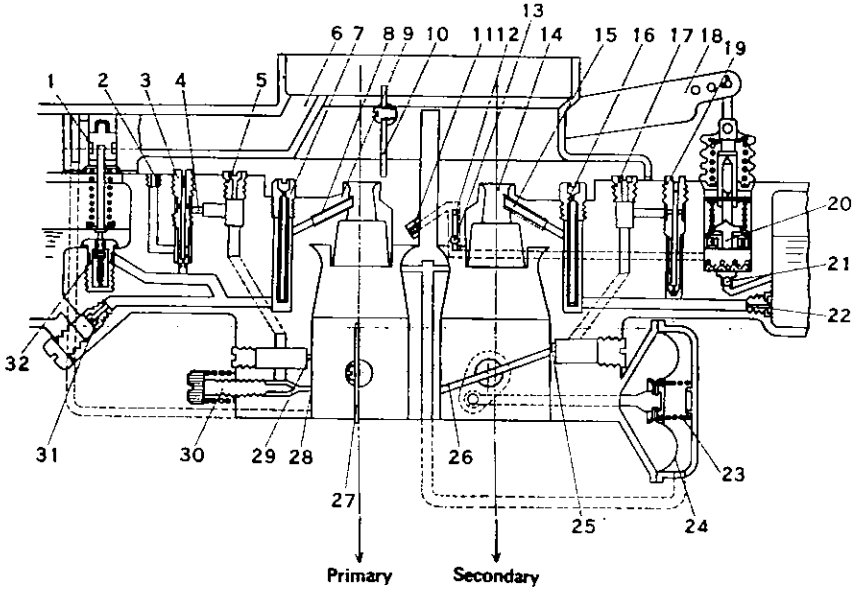

1.	Vacuum piston	7.	P Main air bleed	13.	Discharge check valve	19.	Pump plunger	25.	S Throttle valve
2.	P Slow air bleed	8.	P Main nozzle	14.	S Small venturi	20.	Inlet check valve	26.	P Throttle valve
3.	Slow jet	9.	P Small venturi	15.	S Main air bleed	21.	S Main jet	27.	Idle port
4.	Slow economizer	10.	Choke valve	16.	Step air bleed	22.	Diaphragm spring	28.	Slow port
5.	P Slow air bleed	11.	Pump nozzle	17.	Pump arm	23.	Diaphragm	29.	Idle adjust screw
6.	Air vent	12.	Pump weight	18.	Step jet	24.	Step port	30.	P Main jet
								31.	Power jet

Fig. EF-21 Full throttle at low speed

≪Model D3034C Carburetor≫

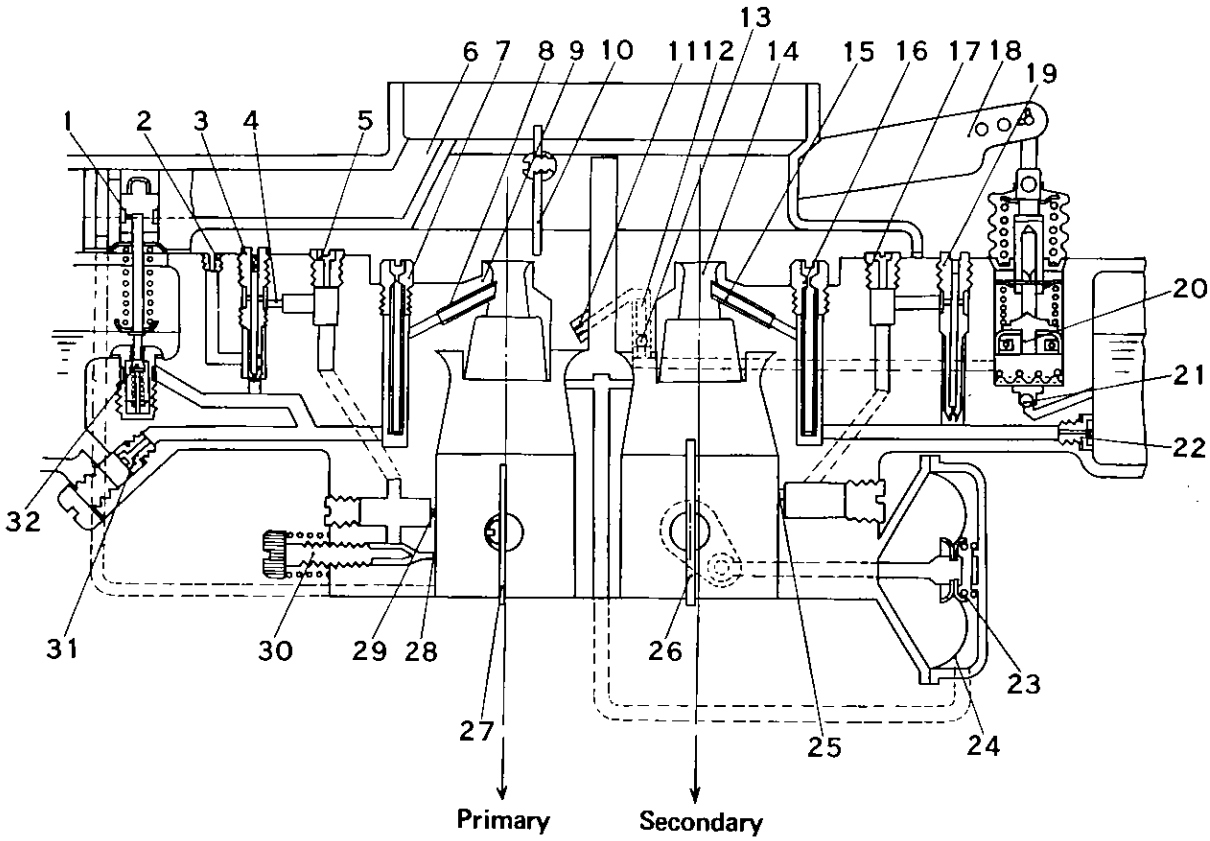

1.	Vacuum piston	11.	Pump nozzle	21.	S Main jet
2.	P Slow air bleed	12.	Pump weight	22.	Diaphragm spring
3.	Slow jet	13.	Discharge check valve	23.	Diaphragm
4.	Slow economizer	14.	S Small venturi	24.	Step port
5.	P Slow air bleed	15.	S Main air bleed	25.	S Throttle valve
6.	Air vent	16.	Step air bleed	26.	P Throttle valve
7.	P Main air bleed	17.	Pump airm	27.	Idle port
8.	P Main nozzle	18.	Step jet	28.	Slow port
9.	P Small venturi	19.	Pump plunger	29.	Idle adjust screw
10.	Choke valve	20.	Inlet check valve	30.	P Main jet
				31.	Power jet

Fig. EF-22 Full throttle at high speed

Float system

There is only one float chamber while two carburetor systems, primary and secondary, are provided.

Fuel fed from the fuel pump flows through the filter and needle valve into the float chamber. A constant fuel level is maintained by the float and needle valve.

Because of the air vent type of the float chamber ventilation, the fuel consumption will not influenced by some dirt accumulated in the air cleaner.

The needle valve is made of special hard steel and will not wear for all its considerably long use.

ADJUSTMENT

Idling adjustment

Idling adjustment is made by the throttle adjust screw and idle adjust screw.

As for the engines equipped with Nissan emission control system, special adjustment is required. Therefore refer to page EC-00 for detail.

Ordinal adjusting method is as follows:

1. Give the idle adjust screw approximately three turns, starting from the fully closed position. Screw in the throttle adjust screw two or three turns and start the engine.

2. Screw out the throttle adjust screw gently until the engine is about to rotate unevenly after the engine speed gradually drops.

3. Screw in the idle adjust screw until the engine runs smoothly at the highest speed.

4. Readjust the throttle screw to drop the engine speed.
Repeat these operations until a smooth engine speed of approximately 550 rpm has been attained.

Note: Do not attempt to screw down the idle adjust screw completely to avoid damage to the tip, which will tend to cause malfunctions.

Fuel level adjustment

≪Model DAK340 Carburetor≫

A constant fuel level is maintained by the float and needle valve.

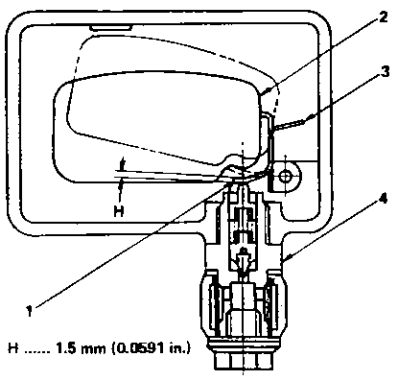

1.	Float seat	3.	Float stopper
2.	Float	4.	Needle valve

Fig. EF-23 Fuel level adjustment (DAK340 carburetor)

If the fuel level is in accord with the level gauge line, the float level is properly set. If the float level is not correct, adjust it by bending the float seat as shown in Figure EF-23.

Approximately *H mm is required as the effective stroke of the needle valve. So adjust the gap between the valve stem and the float seat to *H mm with the float fully lifted up by bending the float stopper.

*H : 1.5 mm (0.00591 in.)

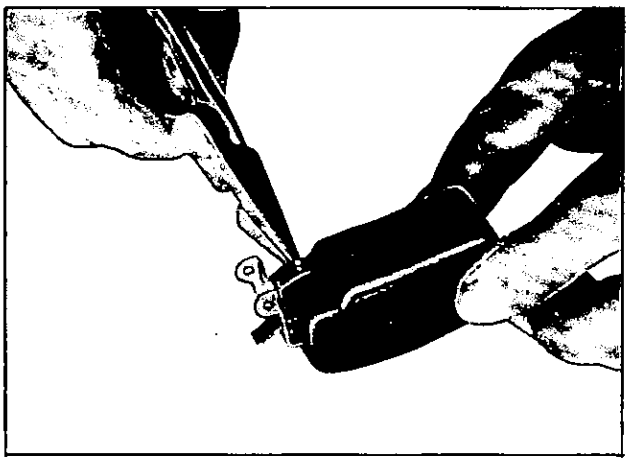

Fig. EF-24 Adjustment of float seal (DAK340)

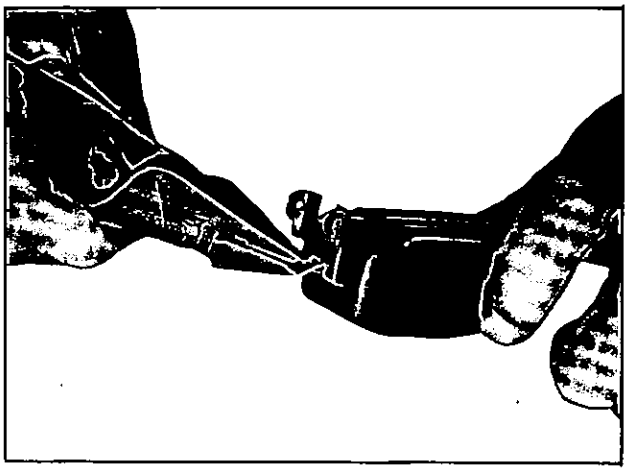

Fig. EF-25 Adjustment of float stopper (DAK340)

≪Model D3034C Carburetor≫

If the fuel level is in accord with the level gauge line, the float level is properly set. If the float level is not correct, adjust it by the gaskets between the body and needle seat. Never adjust it by the float hunger. Approximately 7 mm (0.02756 in.) clearance is required as shown in Figure EF-26.

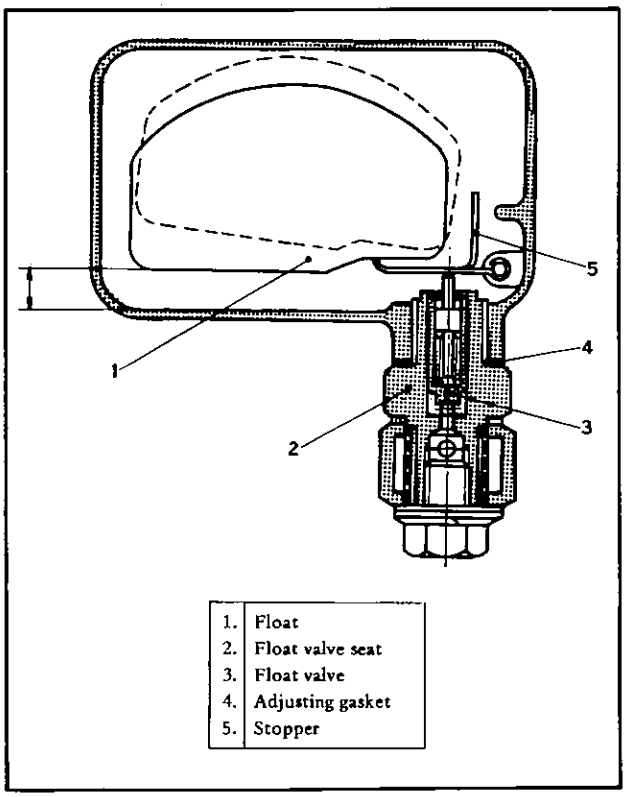

Fig. EF-26 Fuel level adjustment (D3034C)

Adjustment of starting interlock valve opening

≪Model D3034C Carburetor≫

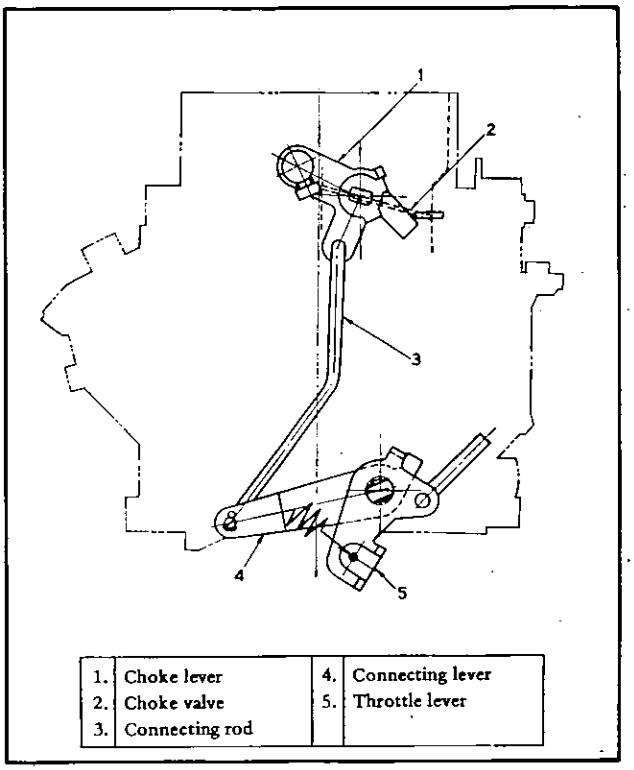

Fig. EF-27 Adjustment of starting interlock opening

≪Model DAK340 Carburetor≫

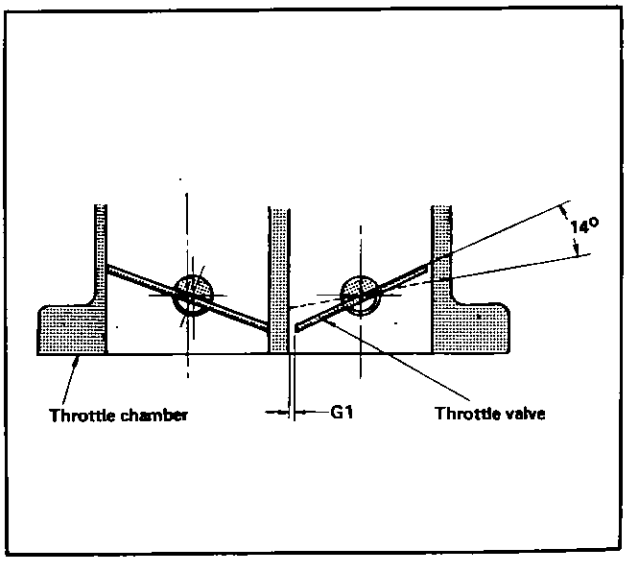

Fig. EF-28 Adjustment of starting interlock opening

The choke valve at a full close position automatically opens the throttle valve at an optimum angle (14° for DAK340 model, and 13.5° for D3034C model) for starting the engine through a link mechanism. As for model DAK340 carburetor, after reassembly, or in a check on the interlocked opening angle, bend the choke connecting rod for adjustment so that a fully closed choke valve will bring the clearance G1 shown in Figure EF-28 to 1.1 mm (0.0433 in.).

Adjustment of interlock opening of primary and secondary throttle valve

≪Model DAK340 Carburetor≫

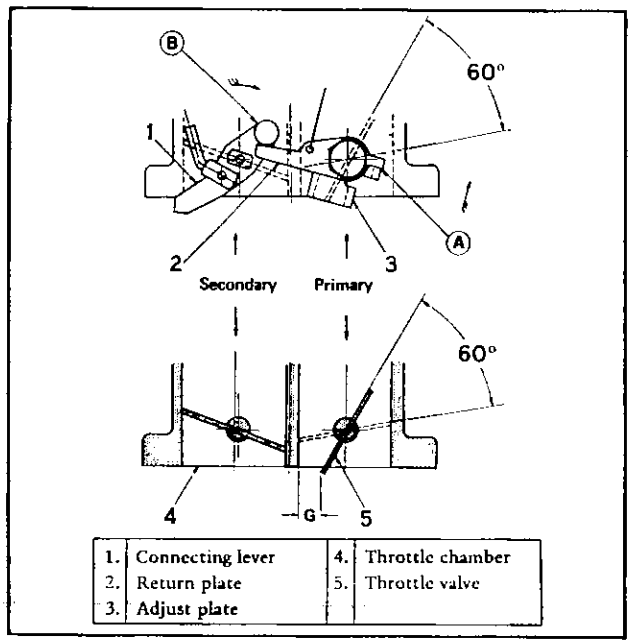

1.	Connecting lever	4.	Throttle chamber
2.	Return plate	5.	Throttle valve
3.	Adjust plate		

Fig. EF-29 Model DAK340 carburetor

Figure EF-29 shows the primary throttle valve opened 60°. When the adjust plate fixed to the primary throttle valve is open 60°, it comes to contact with the connecting lever at Ⓐ. When the throttle valve is further opened, the point Ⓑ, where the connecting lever is in contact with the stopper, is detached, permitting the secondary system to start actuating.

The linkage between the primary and secondary throttles operates properly if the distance between the throttle valve and inner wall of the throttle chamber, G2, amounts to 7.38 mm (0.3937 in.). The adjustment is made by bending the point Ⓐ of the adjusting plate.

≪Model D3034C Carburetor≫

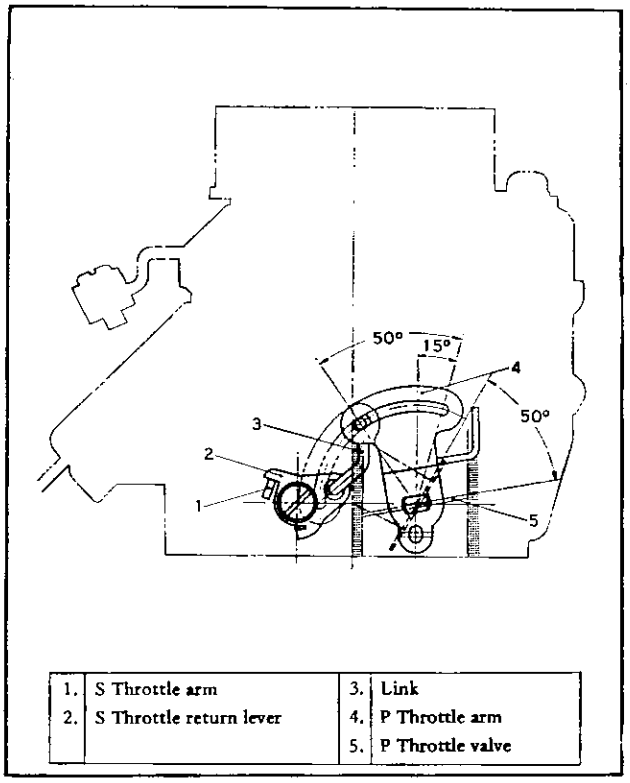

1.	S Throttle arm	3.	Link
2.	S Throttle return lever	4.	P Throttle arm
		5.	P Throttle valve

Fig. EF-30 Model D3034C carburetor

Figure EF-30 shows the primary throttle valve opened 50°. When the primary throttle arm fixed to the primary throttle valve is open 50°, it comes to contact with the connecting link.

Adjustment of the injection amount of the accelerating pump (D3034C carburetor)

The fuel amount forced out from the pump injector during acceleration can be controlled by selecting a fitting hole of the pump arm.

Ordinarily the hole of the middle position should be used. But according to the temperature, select the proper position of the hole as shown in the table.

Position of the hole	Injection amount per one stroke	Temperature
Inner	0.6 c.c. (0.0366 cu.in.)	Below 0°C (32°F)
Middle	0.4 c.c. (0.0244 cu.in.)	0∼30°C (32∼86°F)
Outer	0.2 c.c. (0.0122 cu.in.)	Above 30°C (86°F)

MAJOR SERVICE OPERATIONS

The perfect carubretor delivers the proper gasoline and air ratios for all speeds of the particular engine for which it was designed. By completely disassembling at regular intervals, which will allow cleaning of all parts and passages, the carburetor can be returned to its original condition and it will then deliver the proper ratios as it did when new.

Accurate calibration of passages and discharge holes, require that extreme care be taken in cleaning. Use only carburetor solvent and compressed air to clean all passages and passage discharge holes. Never use wire or other pointed instrument to clean as calibration of carburetor will be affected.

Removal

1. Remove air cleaner.

2. Disconnect fuel line vacuum line and choke wire (in case of auto-choke, choke heat) from carburetor.

3. Remove the throttle lever.

4. Remove four nuts and washers retaining carburetor to manifold.

5. Lift carburetor off manifold.

6. Remove and discard carburetor to manifold gasket.

Disassembly

≪Model DAK340 Carburetor≫

1. Carburetor assembly

(1) Remove primary throttle return spring.

(2) Remove E ring and take off pump and connecting rod.

(3) Remove split pin and take off choke connecting rod.

(4) Remove secondary throttle return spring.

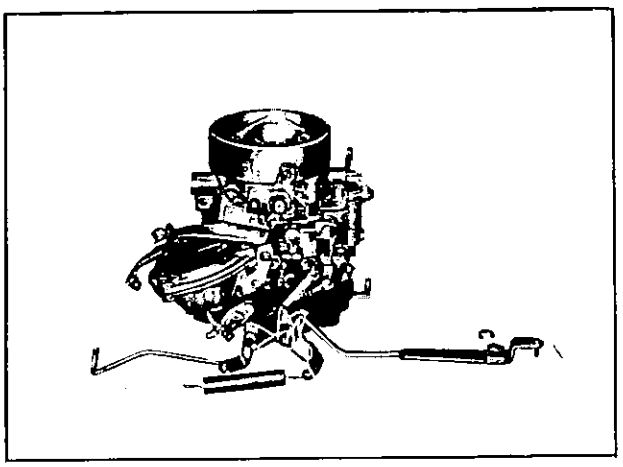

Fig. EF-31 Linkage removal

(5) Remove four fixing screws end take off choke chamber.

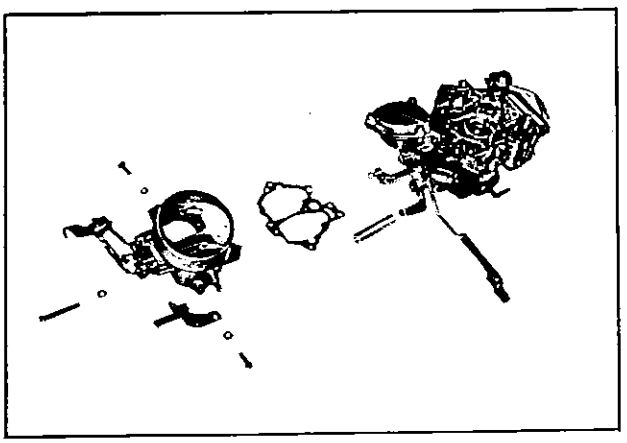

Fig. EF-32 Choke chamber removal

(6) Remove stop pin and four fixing screws. Separate throttle chamber from float chamber.

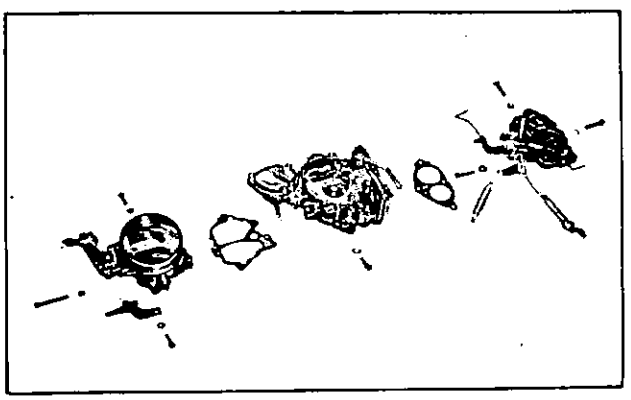

Fig. EF-33 Throttle chamber removal from float chamber

2. Choke chamber

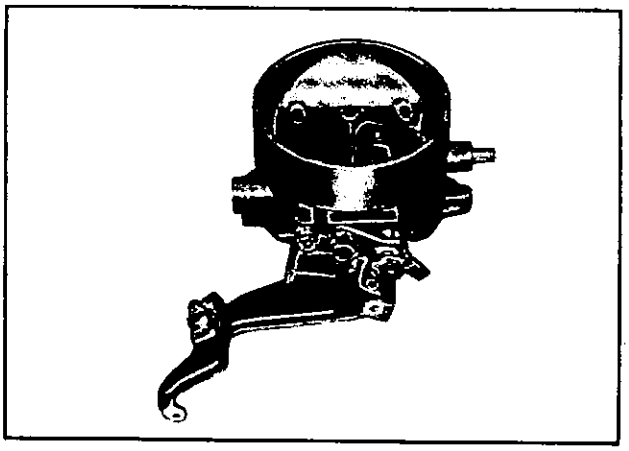

Fig. EF-34 Choke chamber

(1) Remove two screws and take off choke wire arm.

(2) Remove two screws and take off choke valve.

(3) Remove choke shaft and choke valve spring.

(4) Remove choke lever and choke lever spring by taking off the clip.

3. Float chamber

(1) Remove three fixing screws and take off diaphragm chamber cover, diaphragm spring and diaphragm.

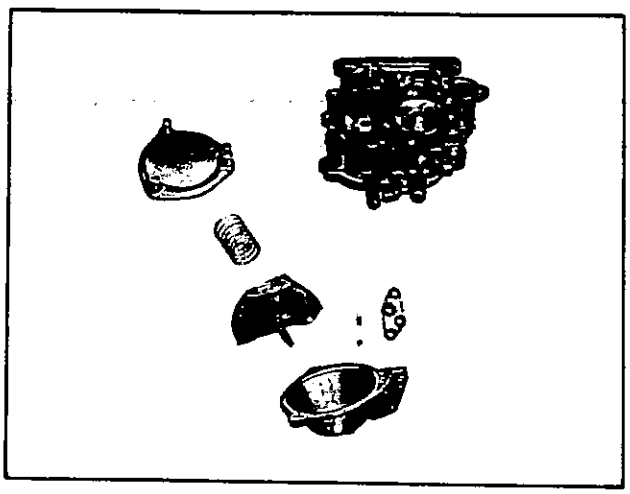

Fig. EF-35 Diaphragm chamber disassembly

(2) Remove three fixing screws and diaphragm chamber and gasket.

(3) Remove four fixing screws and take off float chamber cover, gasket, level gauge, rubber packing and float.

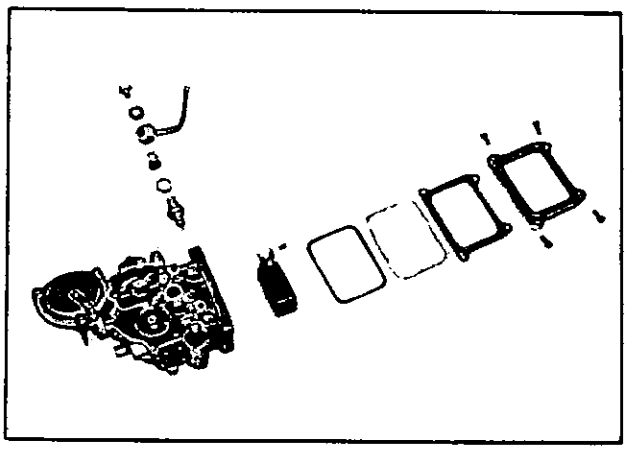

Fig. EF-36 Float chamber disassembly

(4) Remove filter fixing screw and take off nipple and filter.

(5) Remove needle valve.

(6) Remove two fixing screws and take off cylinder cover, pump cover, piston, piston return spring and inlet valve.

(7) Remove injector fixing screw and take off pump injector, injector spring and outlet valve.

(8) Remove primary main air bleed.

(9) Remove secondary main air bleed and emulsion tube.

(10) Remove three fixing screws and take off small venturi.

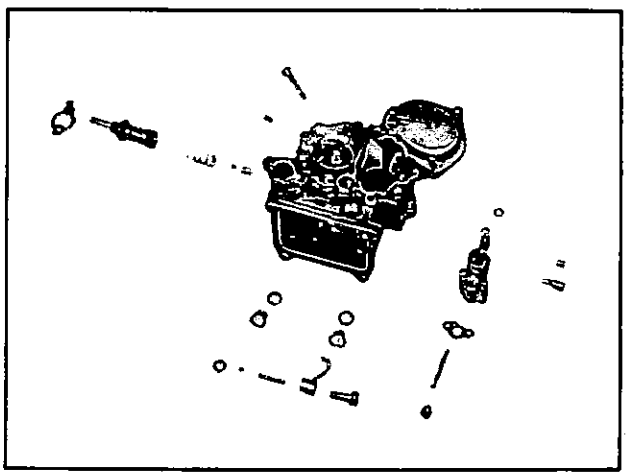

Fig. EF-37 Float chamber disassembly

(11) Remove primary and secondary slow jets and slow air bleeds.

(12) Remove drain plugs and take off primary and secondary main jets.

4. Throttle chamber

(1) Remove throttle adjust screw and spring.

(2) Remove idle adjust screw and spring.

(3) Remove nut and take off throttle lever, spring hunger, sleeve, connecting lever, return plate and adjust plate.

(4) Remove two fixing screws and take off primary throttle valve.

(5) Remove primary throttle shaft.

(6) Remove two fixing screws and take off secondary throttle valve.

(7) Remove secondary throttle shaft.

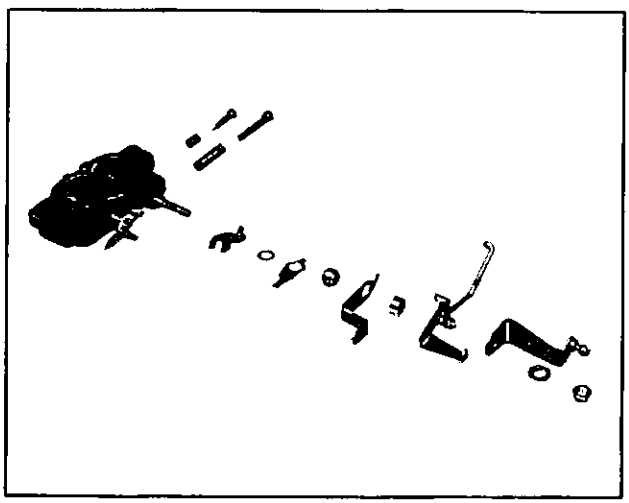

Fig. EF-38 Throttle chamber disassembly

≪Model D3034C Carburetor≫

1) Remove starting connecting rod from choke lever and accelerating pump connecting rod.

(2) Remove three screws and air horn.

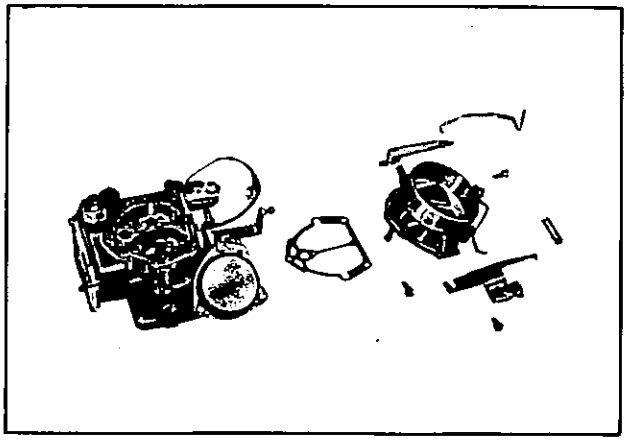

Fig. EF-39 Air horn

(3) Remove pump rod, slow jets, primary and secondary small venturies.

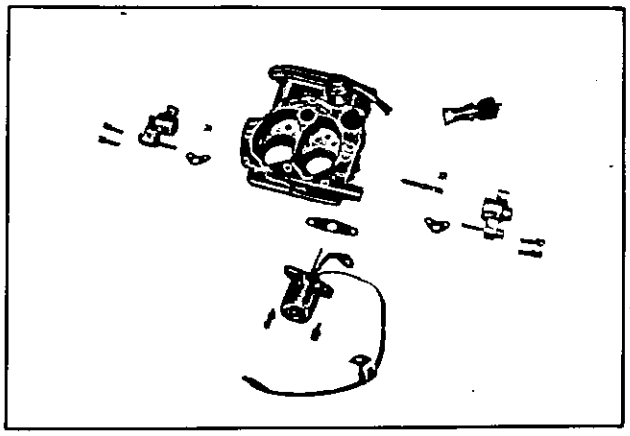

Fig. EF-40 Removal of jets and venturies

(4) Remove primary and secondary linkage parts.

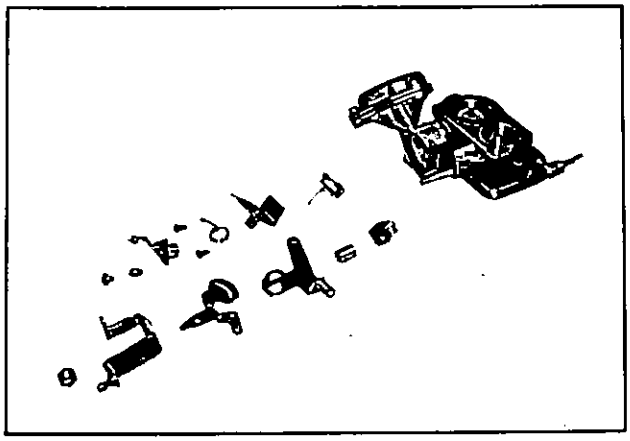

Fig. EF-41 Removal of linkage parts

(5) Remove three fixing screws and take off diaphragm chamber cover, diaphragm spring and diaphragm.

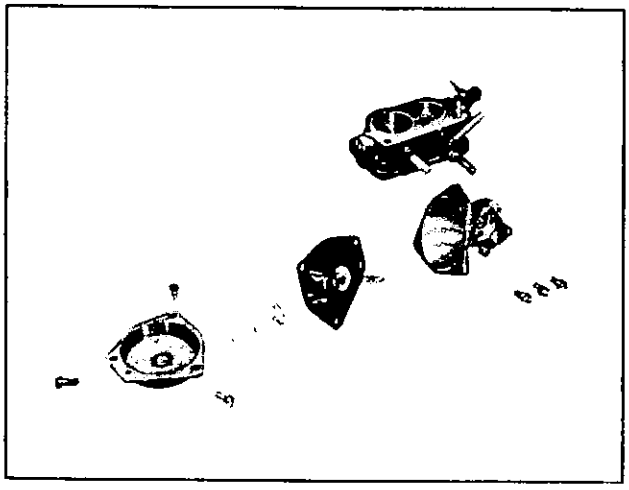

Fig. EF-42 Diaphragm chamber disassembly

(6) Remove three fixing screws and diaphragm chamber and gasket.

(7) Separate float chamber from throttle chamber by removing three fasteners.

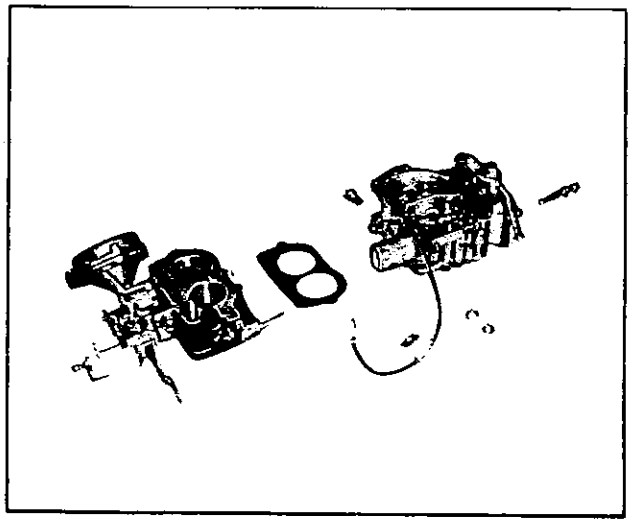

Fig. EF-43 Float chamber removal from throttle chamber

(8) Remove three screws and take off float chamber cover, glass, gaskets, float and check valve.

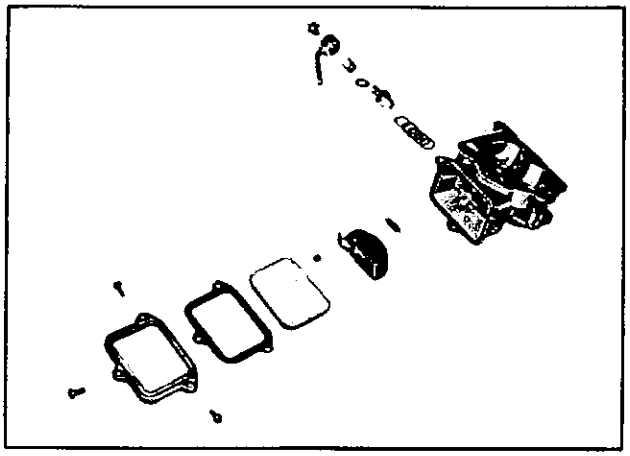

Fig. EF-44 Float chamber disassembly

(9) Remove fuel inlet strainer and float valve seat.

(10) Remove main jets.

(11) Remove two fixing screws and take off fuel cut-off valve.

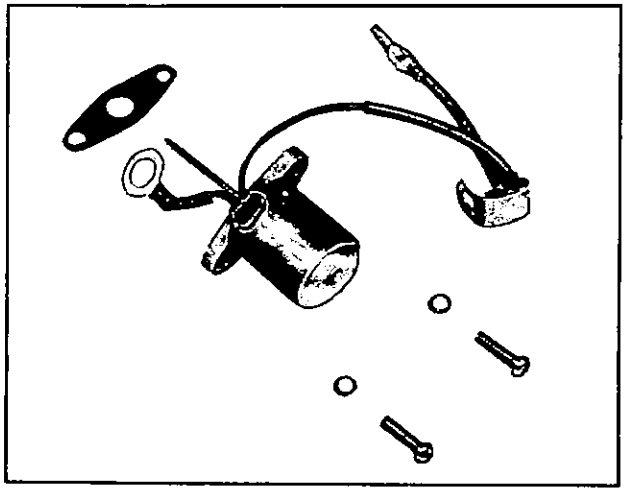

Fig. EF-45 Fuel cut-off valve

Cleaning and inspection

Dirt, gum, water or carbon contamination in or on the exterior moving parts of a carburetor are often responsible for unsatisfactory performance. For this reason, efficient carburetion depends upon careful cleaning and inspection while servicing.

1. Blow all passages and castings with compressed air and blow off all parts until dry.

Note: Do not pass drills or wires through calibrated jets or passages as this may enlarge orifice and seriously affect carburetor calibration!

2. Check all parts for wear. If wear is noted defective parts must be replaced. Note especially the following:

(1) Check float needle and seat for wear. If wear is noted the assembly must be replaced.

(2) Check throttle and choke shaft bores in throttle body and cover castings for wear or out of round.

(3) Inspect the adjusting needles for burrs or ridges. Such a condition requires replacement.

3. Inspect gaskets to see if they appear hard or brittle or if the edges are torn or distorted. If any such condition is noted they must be replaced.

4. Check filter screen for dirt or lint. Clean and if it is distorted or remains plugged, replace.

5. Check venturi clusters for loose or worn parts. If damage or looseness exists, replace cluster assembly.

6. Check the linkage for operating condition.

7. Inspect the operation of accelerating pump. Put in the gasoline in the float chamber and make the throttle lever operate. And the check the injection condition of the gasoline from the accelerating nozzle.

8. Push in the connecting rod of diaphragm chamber and block the passage of vacuum by finger. And when free the connecting rod, check the leakage of air and the damage of diaphragm.

Assembly and installation

Follow the disassembly and removal procedure in reverse.

Replace the gaskets, if necessary.

In disassembling and reassembling the interlock link and related components, be careful not to bend or deform any of the components. Reassemble so that all interlock links operate smoothly.

JETS

The carburetor performance depends on jets and air bleeds. That is why these components are fabricated with utmost care. To clean them, use gasoline and blow air on them. Larger numbers stamped on the jets indicate larger diameters. Accordingly, main and slow jets with larger numbers provide richer mixture, and the smaller numbers the leaner mixture. Inversely, the main and slow air bleeds, which are for air to pass through, make the fuel leaner if they bear larger numbers, and the smaller numbers the richer fuel.

Replacement of designated jets to meet the service condition of the car must be carried out with the above directions in mind. To cite a practical example, when it becomes necessary to economize fuel at the limited sacrifice of output to meet frequent light-load operation, use smaller main jets or slow jets, or larger main air bleeds or slow air bleeds than regularly specified. This should meet the purpose. Inversely, when increase in output is desired at the limited sacrifice of fuel consumption, use larger main jets or slow jets, or smaller main air bleeds or slow air bleeds, and that should bring a satisfactory result.

TROUBLE DIAGNOSES AND CORRECTIONS

In the following table, the symptoms and causes of carburetor troubles and remedies for them are listed to facilitate quick repairs.

There are various causes of engine troubles. It sometimes happens that the carburetor which has no defect seems apparently to have some troubles: when electric system is defective. Therefore, whenever the engine has troubles, electric system must be checked first before starting carburetor adjustment.

Troubles	Possible causes	Remedies
Overflow	Dirt accumulated on needle valve.	Clean needle valve.
	Fuel pump pressure too high.	Repair pump.
	Needle valve seat improper.	Lap or replace.
Excessive fuel consumption	Fuel overflow.	See above item.
	Each main jet, slow jet too large.	Replace.
	Each main air bleed clogged.	Clean.
	Choke valve does not fully open.	Adjust.
	Outlet valve seat of accelerator pump improper.	Lap.
	Linked opening of secondary throttle valve too early.	Adjust.
Power shortage	Each main jet clogged.	Clean.
	Each throttle valve does not fully open.	Adjust.
	Fuel pump operated improperly.	Repair.
	Fuel strainer clogged.	Clean.
	Vacuum jet clogged.	Clean.
	Air cleaner clogged.	Clean.
	Diaphragm damaged.	Replace.
	Power valve operated improperly.	Adjust.
Improper idling	Slow jet clogged.	Clean.
	Each throttle valve does not close.	Adjust.
	Secondary throttle valve operated improperly.	Overhaul and clean.
	Each throttle valve shaft worn.	Replace.
	Packing between manifold/carburetor defective.	Replace packing.
	Manifold/carburetor tightening improper.	Correct tightening.
	Fuel overflow.	See the first item.
Engine hesitation	Each main jet, slow jet clogged.	Clean.
	By-pass hole, idle passage clogged.	Clean tube.
	Emulsion tube clogged.	Clean.

	Idling adjustment incorrect.	Correct adjustment.
	Secondary throttle valve operated improperly.	Overhaul and clean.
Engine does not start.	Fuel overflows.	See the first item.
	No fuel.	Check pump, fuel pipe and needle valve.
	Gauge plate adjustment incorrect.	Correct adjustment.
	Idling adjustment incorrect.	Correct adjustment.
	Fast idle adjustment incorrect.	Correct adjustment.
	Bimetal rod in contact with bimetal case.	Adjust.

SPECIFICATIONS AND SERVICE DATA

Item \ Carburetor model	DAK340		D3034C	
	Primary	Secondary	Primary	Secondary
Outlet diameter mm (in.)	30 (1.1811)	34 (1.3386)	30 (1.1811)	34 (1.3386)
Venturi diameter mm (in.)	23 (0.9055)	29 × 9 (1.1417 × 0.0354)	23 × 14 × 7 (0.9055 × 0.5512 × 0.2756)	28 × 16 × 8 (1.1024 × 0.6299 × 0.3149)
Main jet	# 119	# 165	# 102	# 155
Main air bleed	# 220	# 100	# 60	# 80
Slow jet	# 48	# 90	# 50	# 80
Slow air bleed	# 130	# 100	# 160 × # 150	# 220
Slow economizer mm (in.)	1.4 (0.0551)	–	1.6 (0.063)	–
Economizer bleed mm (in.)	1.2 (0.0472)	–	–	–
Power jet mm (in.)	–		0.5 (0.0197)	
Weight kg (lbs.)	2.5 (5.5)		2.9 (5.87)	

Main jet variation

Altitude	Jet (Model DAK340)	
	Primary	Secondary
1,000 m (3,300 ft.) ~ 2,000 m (6,000 ft.)	115	160
2,000 m (6,000 ft.) ~ 3,000 m (10,000 ft.)	112	155
3,000 m (10,000 ft.) ~ 4,000 m (13,300 ft.)	108	150

Note: Jets for model D3034C carburetor should not be changed because of the special calibration for emission control.

SERVICE JOURNAL OR BULLETIN REFERENCE

DATE	JOURNAL or BULLETIN No.	PAGE No.	SUBJECT

DATSUN 1800

SERVICE MANUAL

MODEL G18

ENGINE

NISSAN MOTOR CO., LTD.

TOKYO, JAPAN

SECTION EC

EMISSION CONTROL SYSTEM

EC

GENERAL DESCRIPTION EC-1
POSITIVE CRANKCASE VENTILATION SYSTEM · EC-1
EXHAUST CONTROL SYSTEM EC-2

GENERAL DESCRIPTION

There are tow types of emissions that must be controlled. These are the crankcase emissions and the exhaust emissions. Crankcase emissions are controlled by use of the Positive Crankcase Ventilation System. Exhaust emissions are controlled by use of the Nissan Air Injection System (N. A. I. S.).

Periodic inspection and required servicing of these systems should be carried out at the recommended intervals to assure a cleaner, better performing, longer-lasting engine and almost complete elimination of air pollution.

POSITIVE CRANKCASE VENTILATION SYSTEM

CONTENTS

DESCRIPTION EC-1
TESTING EC-2
PERIODIC SERVICE EC-2

DESCRIPTION

Crankcase emissions are controlled by use of the so called combination system (with valve controlled by intake manifold vacuum and tube-to-air cleaner device). This system provides for the return of blowby gases to both the intake manifold and carburetor air cleaner.

During part-throttle operation of the engine the intake manifold sucks the crankcase blowby gases through the variable orifice valve (tapered-plunger type).

Normally, the capacity of the valve is sufficient, under these conditions, to handle the blowby plus an adequate amount of ventilating air. The ventilating air is then drawn from the clean side of the carburetor air cleaner, through the tube connection, into the crankcase.

Under full-throttle conditions, the manifold vacuum is insufficient to draw the blowby flow through the valve, and the blowby flow goes through the tube-to-air cleaner in the reverse direction. In cars having excessively high blowby some of the flow will go through the tube connection to the carburetor air cleaner under all conditions.

The control valve was shown to be capable of operating longer with much less clogging.

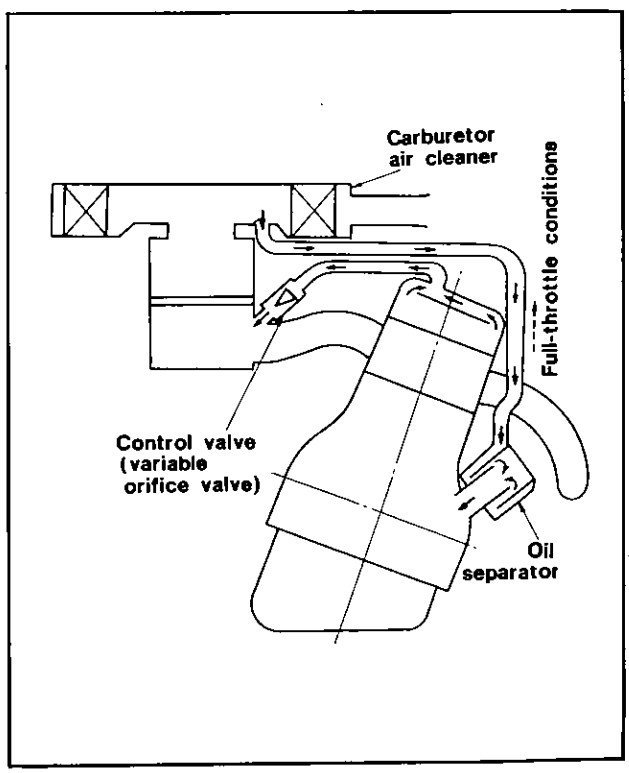

Fig. EC-1 Positive crankcase ventilation (part-throttle operation)

TESTING

With engine running at idle, remove the ventilator hose from the rocker cover. If the valve is working, a hissing noise will be heard as air passes through the valve and a strong vacuum should be felt immediately when a finger is placed over the valve inlet.

If valve is plugged, do not attempt to clean it. Replace with a new valve.

PERIODIC SERVICE

Once a year or at 20,000 km (12,000 miles), the Positive Crankcase Ventilation System should be serviced as follows.

1. Check hoses and hose connectors for leaks.

2. Disconnect all hoses and blow them out with compressed air.

If any hose cannot be freed of obstructions, replace with new hose.

3. Check for proper function of crankcase ventilation control valve.

If the valve is found defective, replace with a new assembly.

EXHAUST CONTROL SYSTEM

CONTENTS

DESCRIPTION ..... EC- 2
NISSAN AIR INJECTION SYSTEM ..... EC- 3
Engine-driven air pump ..... EC- 4
Air injection into each exhaust port ..... EC- 5
Engine modifications ..... EC- 7
Recommended annual maintenance ..... EC- 8
REMOVAL AND DISASSEMBLY PROCEDURE ..... EC- 8
Air pump ..... EC- 8
Drive pulley EC-11
Anti-backfire valve EC-11
Check valve EC-11
Air gallery pipe and injection nozzles EC-11
DIAGNOSIS AND TESTING EC-12
Diagnosis-general exhaust system EC-12
Diagnosis-air pump EC-12
Testing EC-14
SETTING IGNITION TIMING & ADJUSTING IDLE SPEED MIXTURE EC-17
MAINTENANCE EC-17
General maintenance EC-18
Periodic recommended maintenance EC-19
SERVICE DATA AND SPECIFICATIONS EC-20

DESCRIPTION

The Nissan Air Injection System (N. A. I. S.) is designed to reduce air pollution, caused by engine exhaust tailpipe gases, by "treating" the unburned hydrocarbons and carbon monoxide as they are expelled from the combustion chambers into the exhaust manifolds. A sealed bearing pump, driven by the engine, compresses, distributes and injects clean filtered air into the exhaust port of each cylinder. Here the clean air combines with the unburned hydrocarbons and carbon monoxide at high temperatures in a chemical reactions, producing a "treated" exhaust, below the maximum allowable level for air pollution. The elements of the N. A. I. S. include an air cleaner, a belt-driven air injection pump, a check valve, an anti-backfire valve, and related connecting tubes and hoses. A special calibrated carburetor and distributor are also used with the air injection system.

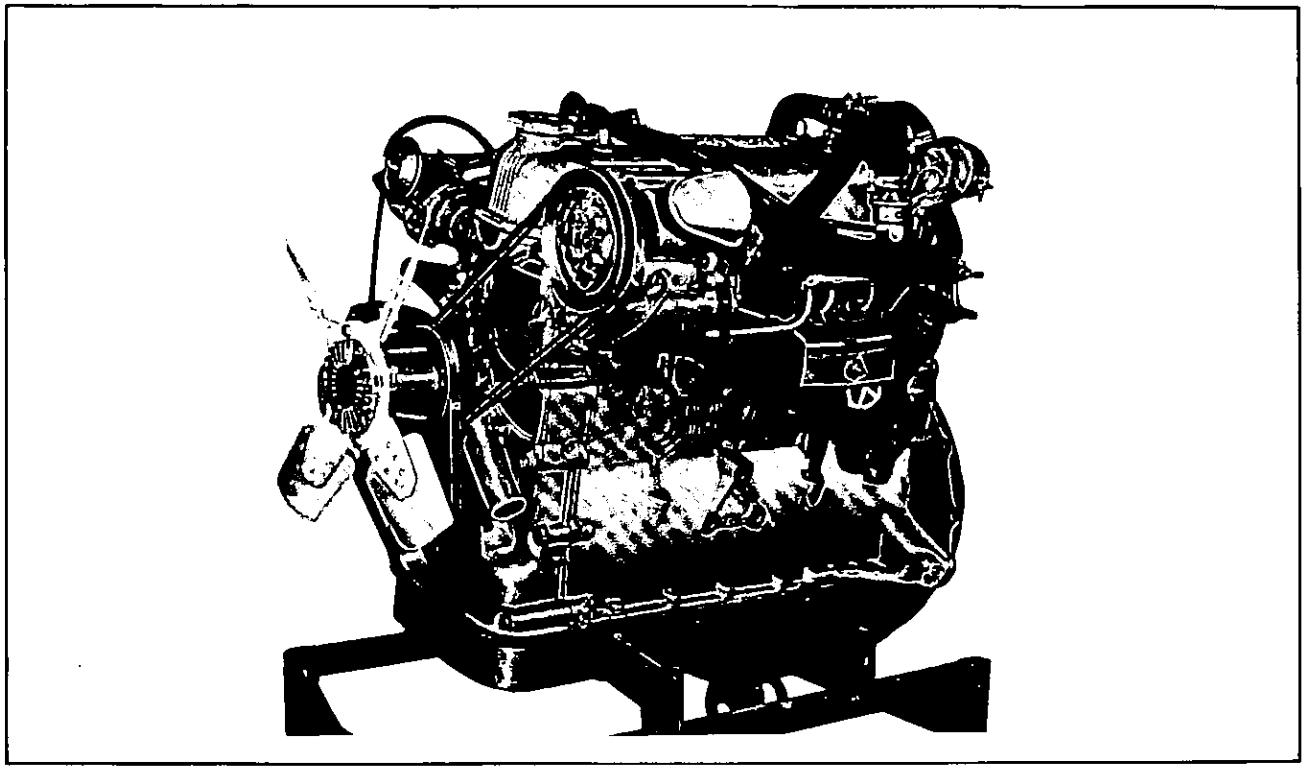

Fig. EC-2 Model G18 Engine

NISSAN AIR INJECTION SYSTEM

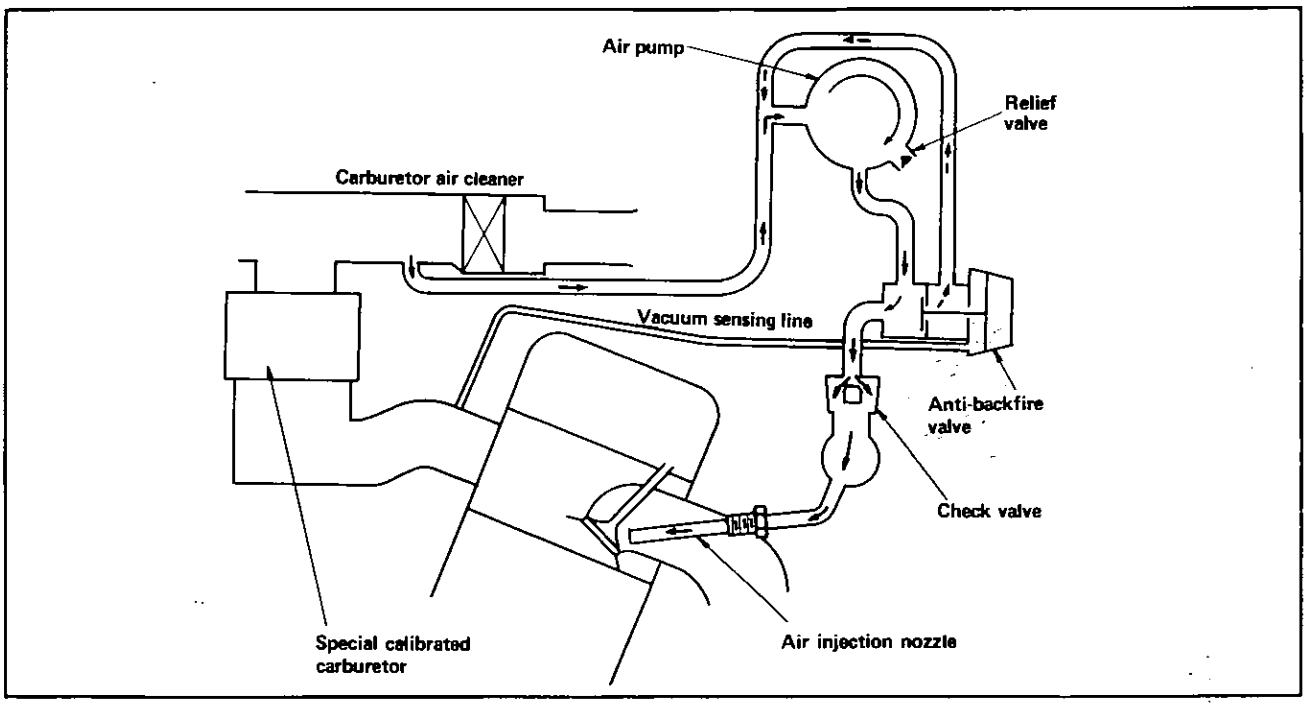

Fig. EC-3 Nissan air injection system

N. A. I. S. is basically an air injection system combined with engine modifications to increase its effectiveness.

The basic elements of the system are:

1. Engine-driven air pump
2. Air injection into each exhaust port
3. Engine modifications
4. Recommended annual maintenance

The air injection pump receives clean air by means of a hose, connected to a fitting on the underside of the carburetor air cleaner.

This rotary vane type pump has been designed to draw the air in and produce maximum air flow with quiet operation. A fresh air line from the air injection pump is routed so that it goes to an anti-backfire valve and then to a check valve, which prevents exhaust gas from entering the air pump in the event exhaust manifold pressure is greater than air injection pressure, or in the case of an inoperative pump. The compressed fresh air is injected through an injection nozzle to the exhaust ports.

An anti-backfire valve has been installed to eliminate "popping" in the exhaust system when the throttle is closed at a high speed "coast". Controls which have been incorporated to assure reliable system operation include an anti-backfire valve and a check valve.

Engine-driven air pump

The air injection pump is a positive displacement vane-type which is permanently lubricated and requires no periodic maintenance.

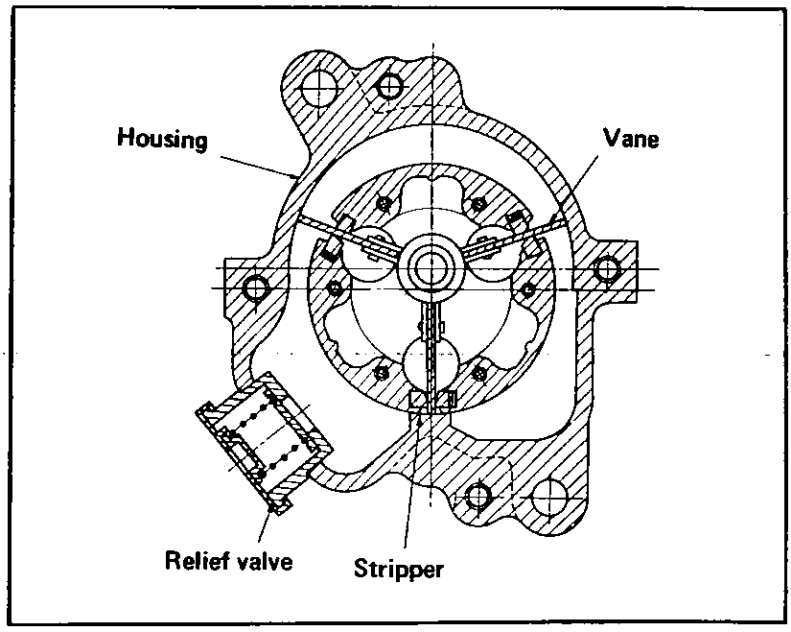

Fig. EC-4 Sectional view of air pump

The die-cast aluminum air pump assembly attached to the front of the engine is driven by an air pump drive belt. A rotor shaft, drive hub, relief valve, and intake and exhaust tubes are visible on the pump exterior. A rotor, vanes, carbon shoes, and shoe springs make up the rotating unit of the pump. The rotor located in the center of the pump is belt driven. The vanes rotate freely around the off-center pivot pin, and follow the circular-shaped pump bore. The vanes produce three chambers in the housing; intake, compression, and exhaust.

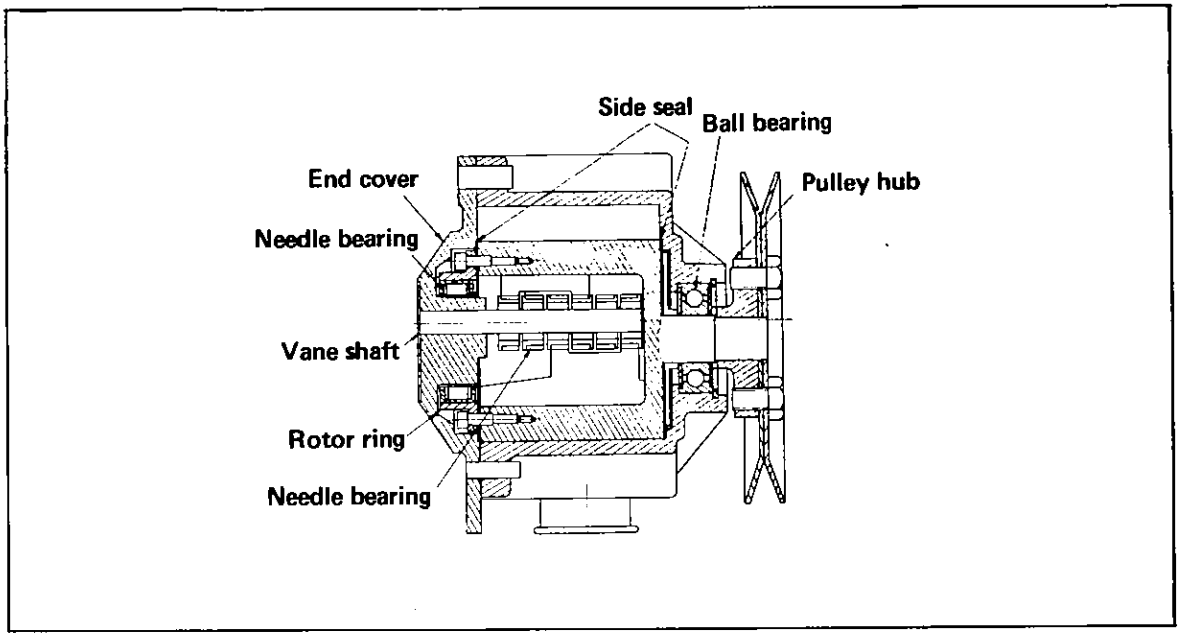

Fig. EC-5 Sectional view of air pump

Each vane completes a pumping cycle in every revolution of the rotor. Air is drawn into the intake cavity through a tube connected to the air cleaner. The air is sealed between the vanes and moved into a smaller cavity, the compression area.

After compression, the vanes pass the exhaust cavity. The vanes then pass the stripper, a section of the housing that separates the exhaust and intake cavities. Continuing the cycle, the vane again enters the intake cavity to repeat its pumping cycle. The relief valve, located in the exhaust cavity, encloses a preloaded spring, a seat, and a pressure-setting plug. Its function is to relieve the exhaust air flow if the pressure exceeds a pre-set value. Metering grooves, machined into the housing wall, located in both the intake and exhaust cavities; provide a quiet transition from intake to compression to exhaust.

Carbon shoes support the vanes from slots in the rotor. The shoes are designed to permit sliding of the vanes and to seal the rotor interior from the air cavities. Leaf springs which are behind the follower-side of the shoes compensate for shoe wear and vane articulation. Air leaking into the rotor is exhausted through two small holes in the end cover. The rotor is further sealed by flexible carbon seals which are attached to each end. The plates also seal off the housing and end cover to confine the air to the pump cavities. Air that leaks by the front carbon seal is exhausted through a small hole in the housing.

Completing the rotating unit is a steel ring bolted to the rotor end. This ring prevents the rotor from spreading at high r. p. m., and also positions and holds the rear bearing and the carbon seal.

The front and rear bearings which support the rotor are of two types. The front bearing uses ball bearings and the rear bearing uses needle bearings. The hub bearings are the needle bearing type. All bearings have been greased for life.

Air injection into each exhaust port

The fresh air from the air pump is injected into the individual exhaust ports of the cylinder head in the vicinity of the exhaust port.

Pressurized air is transmitted through hoses and air distribution manifold.

A schematic of the exhaust port is shown in Figure EC-6.

In addition to air injection, certain controls have been incorporated to assure reliable system operation as follows.

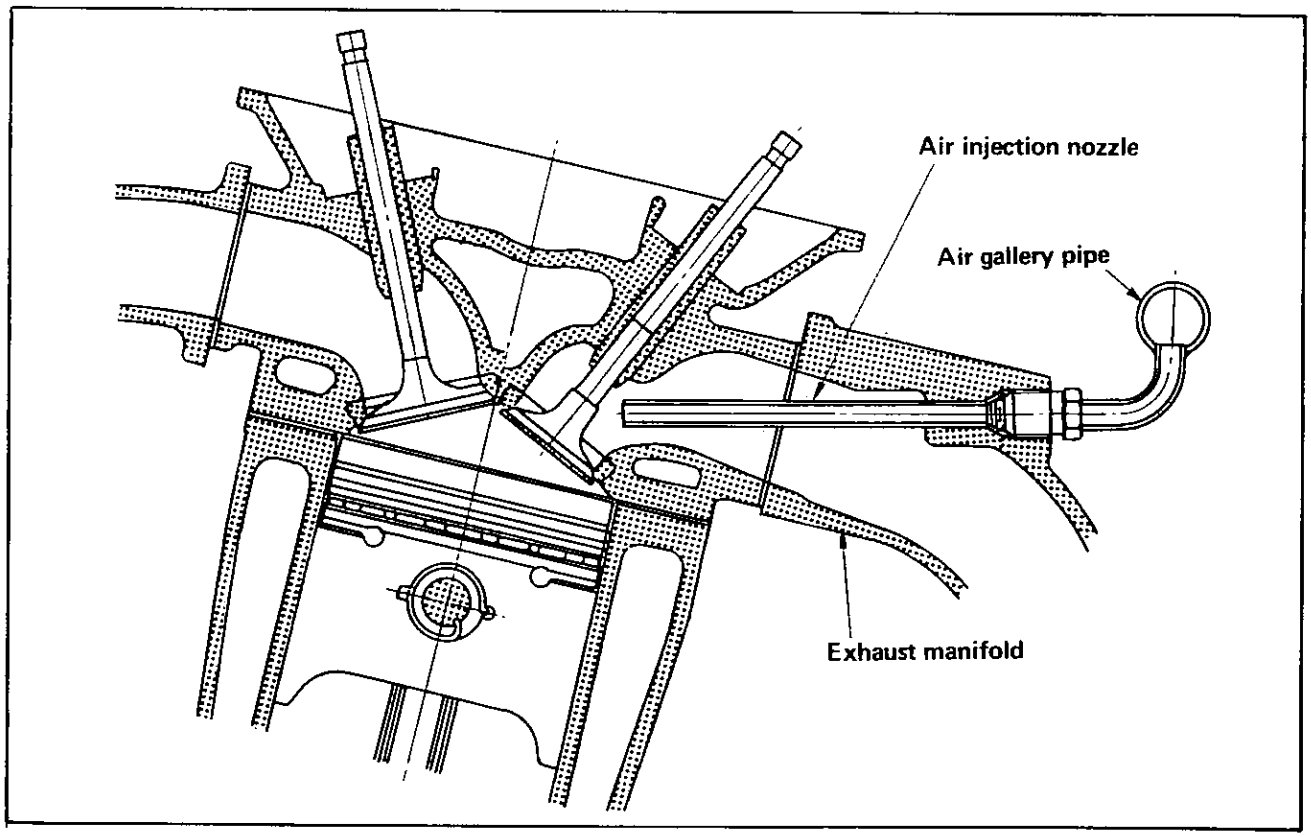

Fig. EC-6 Air injection into exhaust port

Anti-backfire valve

This valve is controlled by intake manifold vacuum and is required to prevent exhaust system backfires during deceleration. During deceleration, the mixture in the intake manifold is too rich to burn and ignites when combined with the injected air in the exhaust manifold.

The anti-backfire valve is used to shut off air delivered to the exhaust system during the first pre-determined period of deceleration, so that backfires are prevented.

A schematic of the anti-backfire valve is shown in Figure EC-7.

The anti-backfire valve inlet is connected to the air pump discharge line, one of the outlets to the check valve and the other to the air pump suction line.

Since the valve action can have a deleterious effect on emission reduction, its operation is set under a fine compromise between adequate backfire suppression and minimum emission effects.

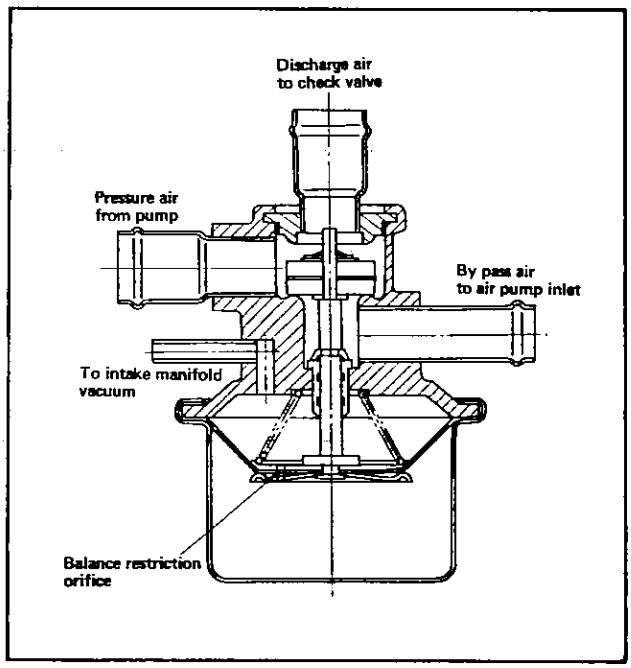

Fig. EC-7 Sectional view of anti-backfire valve

If the valve does not work properly, backfire or emission deterioration will result.

Check valve

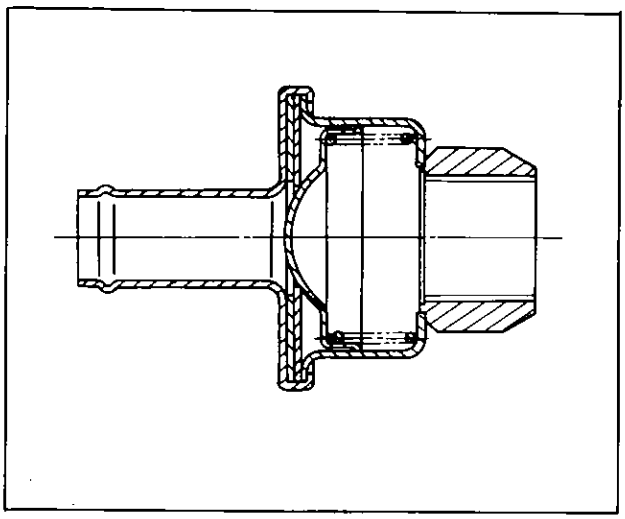

Fig. EC-8 Sectional view of check valve

Check valve is set between the air pump and the air injection nozzle. It prevents a back flow of exhaust gas. Normally, it passes air into the air distribution manifold in the air injection system. When exhaust manifold pressure exceed air injection pressure, as it will at high speed or when the air pump drive belt fails, the air injection nozzle is in the path of the exhaust gases, and the exhaust manifold pressure will exceed air injection pressure, backing up exhaust gas, which is prevented from entering the system by the check valve which closes it off.

Air pump relief valve

The air pump relief valve is mounted in the discharge cavity of the air pump and accomplishes the following functions without affecting the exhaust emission control system's effectiveness:

Hold the increase in maximum exhaust gas temperatures to a minimum.

Minimize horsepower losses resulting from air injection into the exhaust system.

Protect the pump against excessive back pressures.

Engine modifications

The Air Injection System includes some engine modifications necessary to reduce exhaust hydrocarbons and carbon monoxide concentrations.

Carburetor

In consideration of air injection effectiveness, engine performance, fuel economy and drive feeling, the G18 engine for this system is equipped with special calibrated carburetors with narrow to tolerance for fuel flow.

Ignition distributor

The ignition distributor used with the Air Injection System is provided with a different advance curve from that used on engines without an exhaust emission control system.

Idle ignition timing is retarded by 13 degrees.

Idle speed

The idle speed is set at a higher r. p. m. Specifications are 700 r. p. m. for manual transmission equipped vehicles and 650 r. p. m. for automatic transmission equipped vehicles. (Refer to the page EC-17.)

Carburetor idle mixture

On cars equipped with the Air Injection System, slightly rich adjustment of the idle mixture is required.

Cooling system

A modified engine cooling system will be used due to increased engine heat rejection at idle caused by retarded ignition timing.

Cooling system changes such as larger fans, higher fan speeds are incorporated.

Fluid fan coupling

The larger fans increase fan noise.

A fluid fan coupling is used on Air Injection equipped engines. When the engine speed rises to some predetermined speed, the fluid fan coupling is activated and therefore reduces fan noise and fuel consumption.

Spark plug

Projected electrode type spark plugs are employed on all of Nissan's emission controlled engines.

Recommended annual maintenance

For the continued proper performance of the Nissan Air Injection System, annual maintenance must be performed.

The details of annual maintenance are described in chapter 'MAINTENANCE'.

REMOVAL AND DISASSEMBLY PROCEDURE

The exhaust emission control system should not be removed generally and fully inspection must be done prior to removal.

Air pump

Removal

1. Disconnect hoses from air pump housing cover.
2. Remove bolt securing air pump to belt adjusting bar.
3. Remove bolt securing air pump to mounting bracket and remove air pump drive belt.
4. Remove air pump assembly from car.

Periodic service

Since the bearings in the pump have permanent type lubrication, no periodic maintenance is required. Every 4500 km (3000 miles), the belt tension should be inspected and adjusted.

Note: Mask the two holes in the end cover when washing the car with steam cleaner.

Disassembly of air pump

1. Remove four pulley drive hub bolts and remove pulley from hub.
2. Clamp air pump drive hub in a vise, as shown in Figure EC-9 and remove four housing end cover bolts.

Note: Never clamp on the aluminum housing.

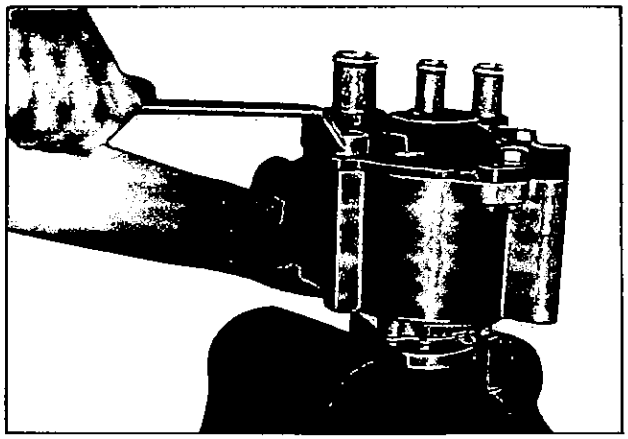

Fig. EC-9 Removing end cover

3. Remove housing end cover by carefully tapping on vicinity of large dowel pin with plastic hammer and lifting straight up.
4. Scribe rotor ring and side of rotor to assure proper reassembly and then remove six screws that retain rotor ring to rotor, using hexagon wrench (special tool: STECP 20000).

Note: Generally manufacture already gives coincidence marks on both rotor ring and rotor.

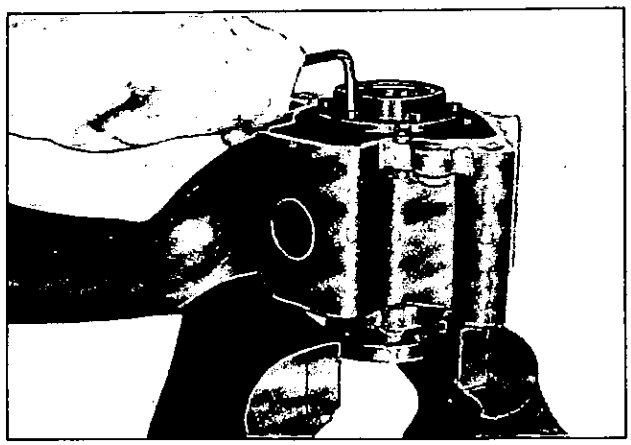

Fig. EC-10 Removing rotor ring

5. Remove rotor ring and side carbon seal from rotor.
6. If it is necessary to replace rear bearing, it may be pressed out of rotor ring on a press using support for disassembling rotor ring (special tool: STECP 20001) and attachment

for pushing needle bearing (special tool: STECP 20002).

Note: Support rotor ring carefully to avoid distortion.

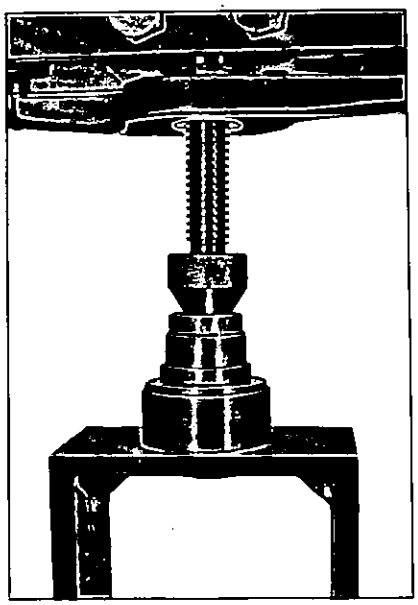

Fig. EC-11 Removing rear rotor bearing

7. Remove vanes from rotor.
8. Remove three sets of carbon shoes and three shoe springs using pair of tweezers or needle nose pliers.

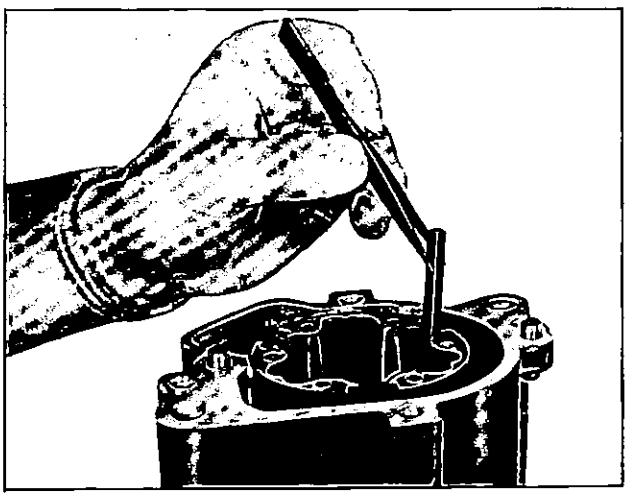

Fig. EC-12 Removing carbon shoe

9. If it is necessary to replace the relief valve, use bridge for pulling out relief valve (special tool: STECP 20004) and standard puller.

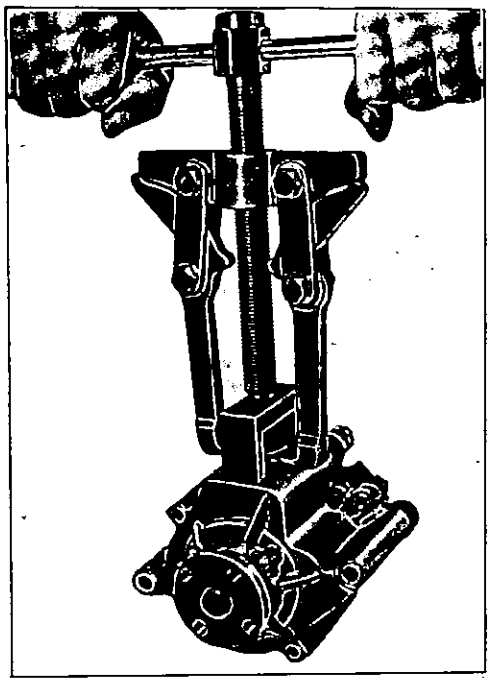

Fig. EC-13 Removing relief valve

10. No further disassembly should be attemped.

Cleaning-inspection-lubrication

Cleaning

Clean rear bearing and vane hub bearings in petroleum solvent.

Clean carbon dust from pump housing and rotor assembly with an air hose.

Note: Do not use cleaning solvent on pump housing and rotor assembly.

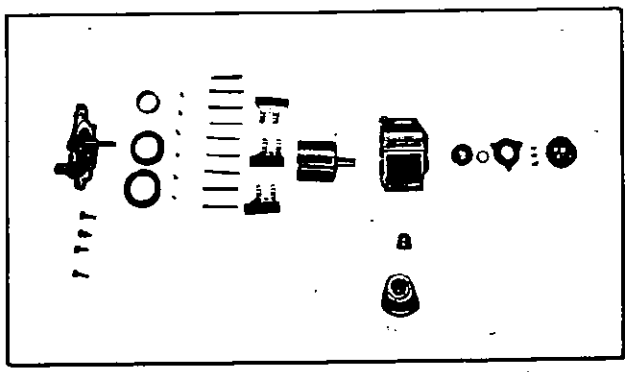

Fig. EC-14 Air pump components

Inspection

Inspect all parts for chipping, scoring, wear and roughness.
All damaged parts must be replaced to ensure quiet and efficient operation. If especially side carbon seal is scored, replace with new one.

Carbon dust may be present in the housing and is usually an indication of normal wear.

Lubrication

The rear bearing and vane hub bearings must be lubricated with a high melting point grease such as ESSO ANDOK 260 or its equivalent. Work grease into each bearing to insure adequate lubrication.

Note: Bearings for service are already packed with high melting point grease.

Assembly of air pump

1. Place air pump housing in a vise, clamping pump drive hub between jaws.
2. Assemble vanes correctly on dummy shaft 9.5ø (special tool: STECP 20005).

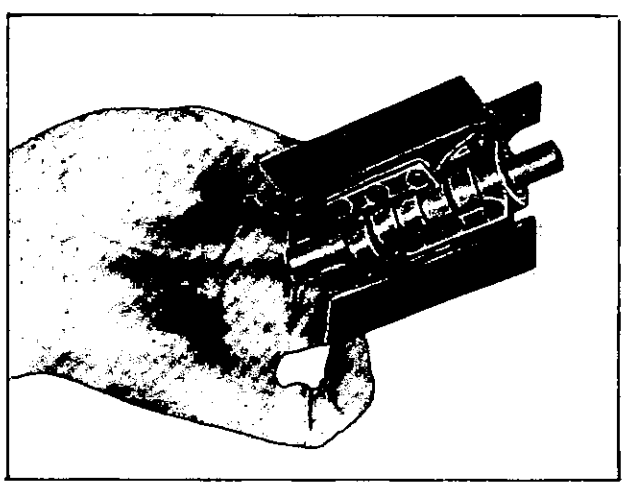

Fig. EC-15 Vane assembly

3. Place vanes into rotor, making sure that one vane is against housing stripper. Do not remove dummy shaft at this time.

Note: a. Pack in vane hub bearing with high melting point grease such as ESSO ANDOK 260.
b. Installation of a new vane set in air injection pump may result in vanes chirping or squeaking during initial operation. The vanes may require five to ten miles wear-in running time. In the event a slight squeaking still persists the vehicle should be run through two or three full throttle shift points. In most cases five to ten miles will be sufficient for wear-in.

4. Insert one carbon shoe on each side of every vane.

Note: Each carbon shoe must the positioned so that chamfered end of shoe faces to vane.

5. Insert three shoe springs into the deeper of shoe slots.

Note: When springs are properly positioned, they will be flush or below rotor surface. The curved portion of spring will be against the shoe and ends will be against wall of shoe slot.

6. If rear bearing was removed, a new bearing may be pressed into rotor ring using attachment for pressing in needle bearing (special tool: STECP 20003). The bearing should be about 0.8 mm (0.0315 in.) below rotor ring surface.

Note: Press only on lettered end bearing surface and support rotor ring to prevent its distortion.

7. Position new carbon seal on rotor ring so that holes line up.
8. Position rotor ring so that scribe marks on rotor ring and side of rotor line up.
9. Apply thread locking material to six rotor ring retaining screws and tighten them to 30 to 50 kg-cm (2.2 to 3.6 lb-ft.).
10. Remove dummy shaft from vanes and start housing end cover assembly into position, indexing vane shaft into vane bearings. Do not force cover on as this will distort vane bearing and/or vane bearing alignment.
11. Seat end cover to housing and starting with bolt adjacent to large dowel torque four end cover bolts to 100 to 130 kg-cm (7.2 to 9.4 lb-ft.). Remove from vise.

12. Insert relief valve into housing mounting hole. With protective plate over valve tap with hammer until valve shoulders on housing.

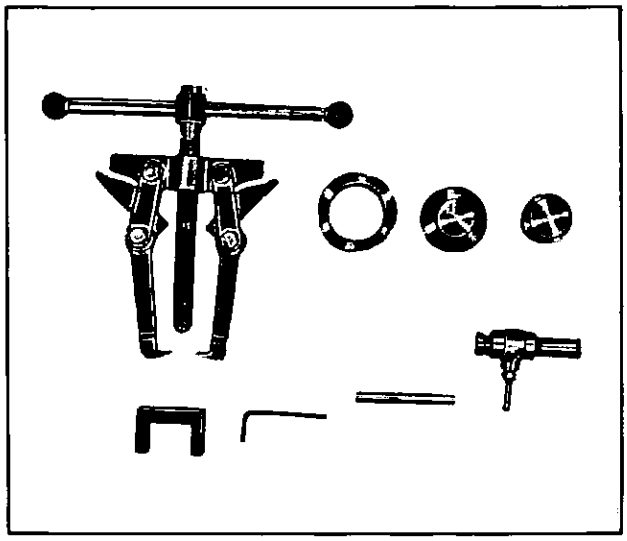

Fig. EC-16 Special tool

Note: Care must be observed to prevent distortion of air pump housing.

13. Set silencer to relief valve by hand.

Installation of air pump

Installation of air pump is reversal of procedure given for removal noting following points.

Adjust the belt tension so that it has 8 to 12 mm (0.315 to 0.472 in.) of slack under 7 to 10 kg (1.5 to 2.2 lb) of load.

Note: Do not pry on the die cast pump housing.

Drive pulley

1. Loosen the air supply pump adjusting bar nut and bolt to relieve the belt tension.

2. Remove the drive pulley attaching bolts.

Anti-backfire valve

The removal of the anti-backfire valve requires disconnecting the hoses. No further disassembly should be done. After installation check the valve operation and inspect all hoses and hose connections for leak.

Check valve

1. Disconnect the air supply hose.

2. Remove the check valve from the air gallery pipe holding the flange of air gallery pipe with a wrench.

Note: a. Take care not to damage the air gallery pipe.
b. No further disassembly should be done.

3. Installation of check valve is reversal of procedure given for removal.

Note: a. Before installation apply the anti-seize compound such as LED-PLATE No.250 at the screw.
b. Tightening torque 9.0 to 10.5 kg-m (65 to 76 lb-ft.).

4. After installation check the valve, hoses and hose connections for air leakage.

Air gallery pipe and injection nozzles

It is very difficult to remove injection nozzles from the exhaust manifold without damaging. If damaged, it will result in fractures or leakage. Therefore the removal of the air gallery pipe and injection nozzle should be done only when they are damaged.

1. Lubricate around the screwed portion of the air injection nozzle with engine oil.

2. Remove the screwed plug connecting air gallery to injection nozzle (exhaust manifold). And then remove the air gallery from the exhaust manifold.

Note: a. Apply engine oil to the screwed portion in several times during the above sequence work.
b. Take care not to damage other correct parts.

3. Insert a hard wire with hooked tip through the injection nozzle and hook nozzle with it, and then remove.

4. Check the air gallery and nozzle for fractures or leakage. Clean the air injection nozzle with wire brush.

5. At the time of installation, the air injection nozzles must be correctly positioned into the exhaust manifold.

6. Tighten the screwed plug connecting the air gallery to injection nozzle (exhaust manifold) to a torque of 5.0 to 6.0 kg-m (36 to 43 ft. lb.).

Note: Before installation apply the anti-seize compound such as LED-PLATE No.250 at the screw.

7. Check the engine running.

DIAGNOSIS AND TESTING

Diagnosis-general exhaust system

A preliminary "Diagnosis Guide" is included below as an aid in trouble shooting the exhaust emission control system.

Trouble	Possible cause
Excessive backfire in exhaust system	Anti-backfire valve vacuum line collapsed, plugged, disconnected or leaking. Defectibe or mulfunctioning anti-backfire valve. Improper carburetor fuel mixture adjustment.
Air supply hose baked or burned	Defective check valve on air distribution manifold.
Rough engine idle	Improper carburetor adjustment-idle speed, idle fuel mixture, choke setting, etc. Improper initial ignition timing. Intake vacuum leak at the anti-backfire valve vacuum line or at the anti-backfire valve vacuum chamber.
Engine surges at all speeds	Improper carburetor adjustment-idle speed, idle fuel mixture, choke solting, etc.
Noisy air pump drive belt	Drive belt improperly adjusted. Seized or failing air pump. Misaligned or defective pulleys.

Diagnosis-air pump

On car

Noise - external cause

Air injection pump is not completely noiseless. Under normal conditions, noise rises in pitch as engine speed increase.

If excessive noise is heard, the following steps should be taken:

1. Check pump to see that it rotates and check belt for proper tension.
2. Check hoses to insure that they are not loose, leaking or touching other parts of car.
3. Check relief valve for escaping air.

Noise - internal cause

1. Vane noise
   A chirping or squeaking noise is most commonly associated with vanes rubbing in housing bore. Vane chirping is most noticeable at low speed and is heard intermittently.
   Additional wear-in time may eliminate this condition. If additional wear-in time does not eliminate chirp, pump must be disassembled, vanes and carbon shoes replaced.
2. Bearing noise
   A rolling sound indicates bearing noise. This sound will be noticeable at all speeds, but does not necessarily indicate bearing failure. However, if noise increases to objectionable level, bearing may have to be replaced.

Off car

1. With pump removed from car, rotate drive hub in jerks three-quarters of turn forward and one-quarter of turn backward. If roughness or bumps are felt, remove rear cover.
2. Inspect carbon seal. This seal should not show holes caused by wear or be broken or cracked. Such condition commonly results from rear and/or vane bearing failure.
   A failed seal must be replaced.
3. With rear rotor ring and carbon seal removed, pull out vanes. Vane bearing failure is also indicated by absence of grease or caked grease. Inspect vane shaft to confirm this bearing failure. All corners of vanes should be square. Broken edges require vanes be replaced.
4. Remove carbon shoes and inspect surface contacting vane. Small grooves in shoes are normal, chipped or broken shoes require replacement. Broken shoes indicate improper assembly of shoe springs. Damaged shoes must be replaced and springs must be properly installed.
5. Carbon dust may be present on vanes and in housing. This is indication of normal wear, not failure. Remove carbon dust by blowing air on parts in question.

Trouble	Possible cause	Remedies
Inoperative pump	Trouble in pump.	Replace with new pump.
	Excessive slackness of drive belt.	Adjust drive belt tension to specified data.
Insufficient delivering air	Damaged vane hub bearing.	Replace defective parts.
	Worn vane.	Replace worn parts.
	Worn carbon shoe.	Replace worn parts.
	Worn side seal.	Replace worn parts.
Air leakage	Leakage from hoses, connectors or clamps.	Ammend or tighten. Replace if necessary.
	Leakage from relief valve.	Replace relief valve.
Abnormal noise	Stick of air pump.	Replace with new assembly.
	Slackness of drive belt. (in accelerating)	Adjust drive belt tension.
	Leakage from hoses, connectors or clamps.	Retighten or replace.

Testing

The following procedures are recommended for checking and/or verifying that the various components of the exhaust emission control system are operating properly. The engine and all components must be at normal operating temperatures when the test are performed. Prior to performing any extensive diagnosis of the exhaust control system, it must be determined that the engine as a unit is functioning properly. (Disconnect the anti-backfire valve vacuum sensing hose. Plug the anti-backfire valve vacuum sensing hose to close the passage to the intake manifold-N. A. I. S.). After checking the engine normal operation, reinstall all the N. A. I. S. parts.

Check valve test

This test can be performed at the same time as the air pump test.

a) Operate the engine until it reaches normal operating temperature.

b) Inspect all hoses and hose connectors for obvious leaks and correct as necessary before checking the valve operation.

c) Disconnect air supply hose at the check valve.

d) Visually inspect the position of the valve plate inside the valve body. It should be lightly positioned against the valve seat away from the air distributor manifold.

e) Insert a probe into the valve connection on the check valve and depress the valve plate.

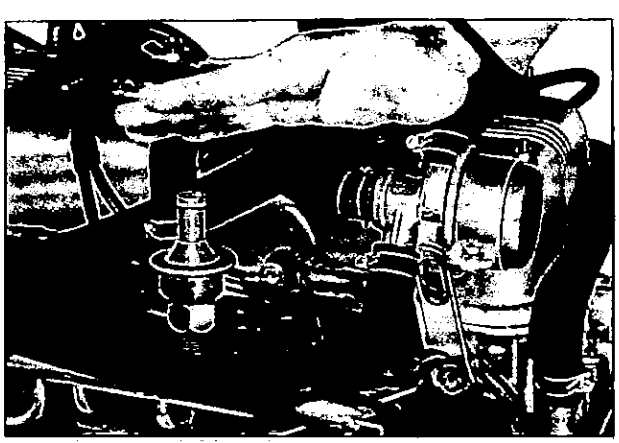

Fig. EC-17 Check valve test

It should freely return to the original position, against the valve seat, when released.

f) Leave the hose disconnected and start the engine. Slowly increase the engine speed to 1,500 r.p.m. and watch for exhaust gas leakage at the check valve. There should not be any exhaust leakage. The valve may flutter or vibrate at idle speeds, but this is normal due to the exhaust pulsations in the manifold.

g) If the check valve does not meet the recommended conditions, replace it.

Anti-backfire valve test

a) Operate the engine until it reaches normal operating temperature.

b) Inspect all hoses and hose connections for ovbious leaks, and correct them before checking the anti-backfire valve operation if necessary.

c) Accelerate the engine, in neutral, allowing the throttle to close rapidly. The valve is operating satisfactorily when no exhaust system backfire occures.

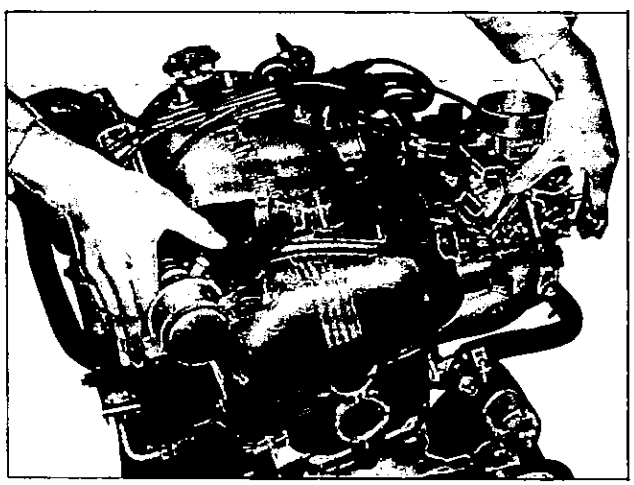

Fig. EC-18 Anti-backfire valve test

d) If a further check is necessary, disconnect the by-pass hose to air pump suction line at the anti-backfire valve.

e) Open and close the throttle valve rapidly. If air flow is felt for half a second to one by a finger at the anti-backfire valve outlet to the air pump suction line, the valve is functioning properly. If air flow is not felt or air flow is felt continuously more than two seconds, the valve should be replaced.

f) Disconnect the vacuum sensing hose from the intake manifold at the anti-backfire valve. Insert a suitable plug in the hose and fasten it securely.
If engine idle speed varies excessively from the case the vacuum sensing hose is connected with the valve, the valve function is not proper and it should be replaced.

Air pump test

a) Operate the engine until it reaches normal operating temperature.

b) Inspect all hoses and hose connections for leaks and correct as necessary before checking the air supply pump.

c) Check the air pump belt tension and adjust to specifications.

d) Install a tachometer on the engine. Start the engine and slowly increase the engine speed to 1,500 r.p.m. Check the air pump in the following order.

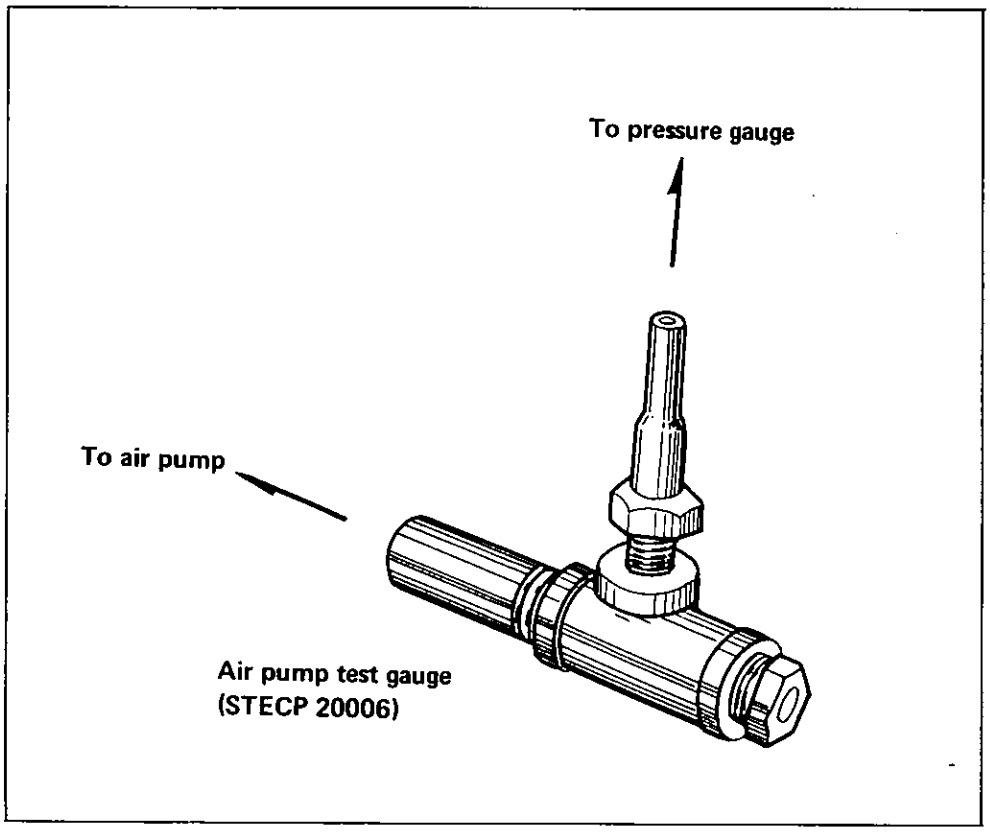

Fig. EC-19 Air pump test gauge

AIR PUMP TEST

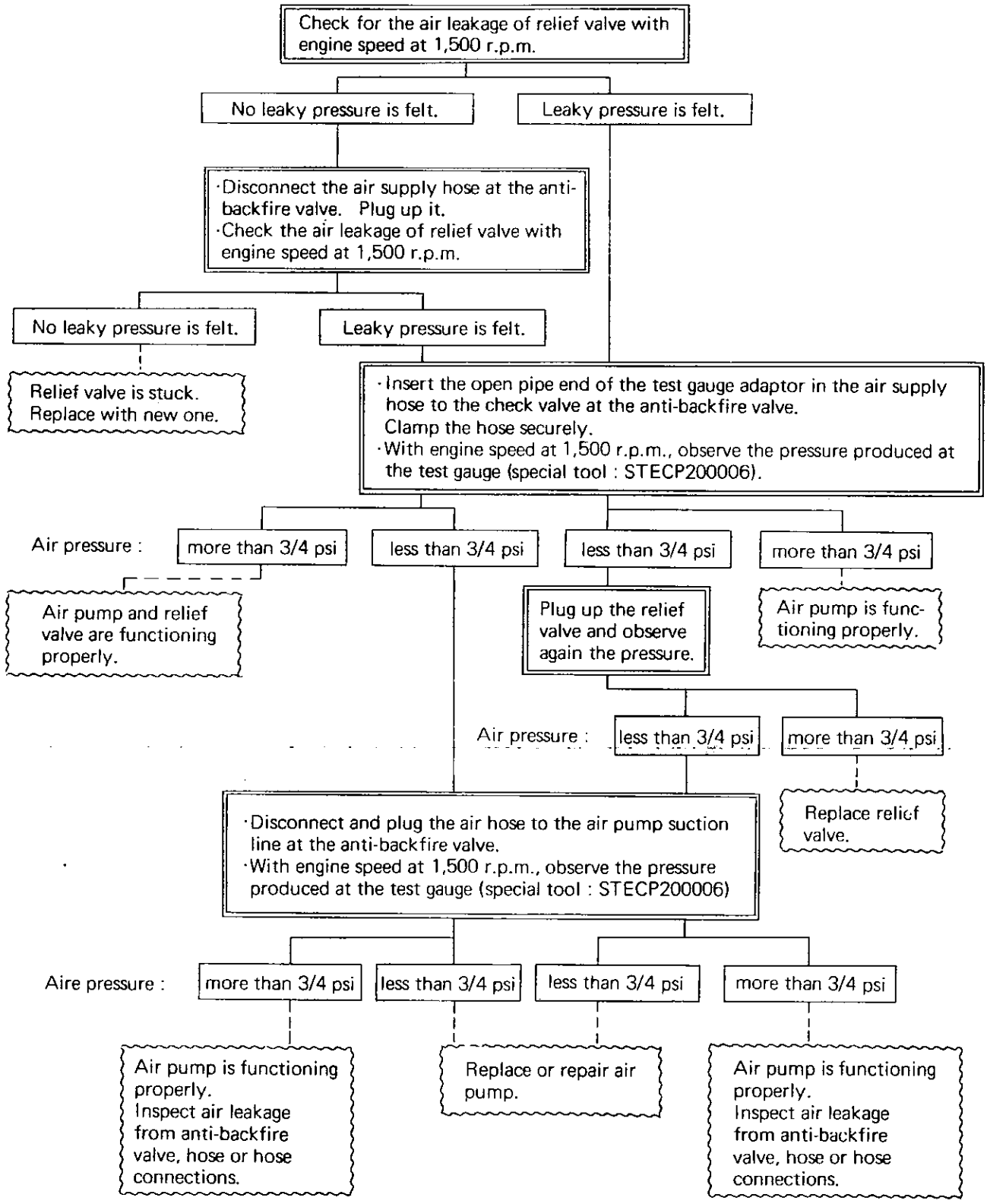

SETTING IGNITION TIMING & ADJUSTING IDLE SPEED MIXTURE

Engine tune-up must be done according to Nissan Specifications with necessary equipments recommended.

The following procedures are recommended.

1. Install the air cleaner.

2. Warm up the engine thoroughly with the transmission in neutral position.

3. Connect ignition tachometer and timing light.

Note: If the car is equipped with automatic transmission, make sure the dash pot does not interfere with throttle closing.

4. Turn the throttle shaft arm adjust screw counter-clockwise so that the tip of it does not touch the throttle shaft arm.

5. Set the idle speed at 700 r. p. m. (650 r. p. m. for automatic transmission) by adjusting the throttle adjust screw and adjust the ignition timing at 5° A. T. D. C.

6. Adjust the idle adjust screw and throttle adjust screw until the most satisfactory 700 r. p. m. (650 r. p. m. for automatic transmission) engine speed is obtained.

7. Turn the idle adjust screw clockwise for leaner mixture until the point where the engine idle speed begins to drop. (approximately 10 r. p. m.)

8. Turn the idle adjust screw counter-clockwise for richer mixture one turn (one and a half for automatic transmission).

9. Set the engine speed at 700 r. p. m. (650 r. p. m. for automatic transmission) by adjusting the throttle adjust screw. Check the ignition timing. Timing should remain at 5° A. T. D. C. at 700 r. p. m. (5° A. T. D. C. at 650 r. p. m. for automatic transmission).

10. Turn the throttle shaft arm adjust screw clockwise so that the tip of it just touches the throttle shaft arm.

Note: Care must be taken that the throttle shaft arm should never be pressed by the throttle shaft arm adjust screw.

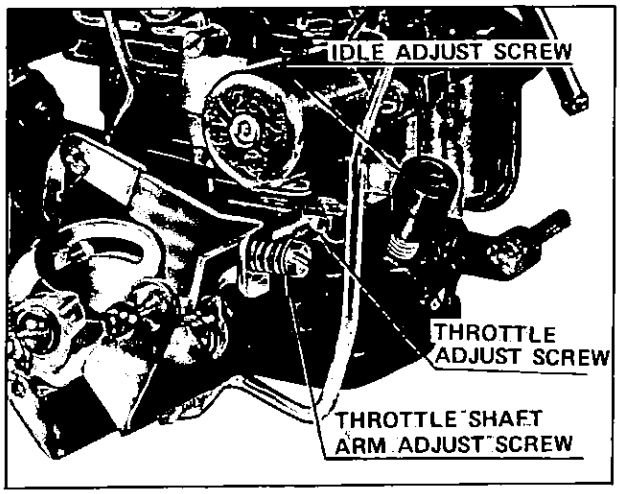

Fig. EC-20 Model D3034C carburetor

Note: If you set idle speed and mixture by using CO meter, the following procedure should be done after above item 3.

a. Disconnect the air supply hose at the check valve. Insert a suitable plug in the check valve inlet.

b. Set the speed at 700 r.p.m. (650 r.p.m. for automatic transmission) by adjusting the throttle adjust screw and adjust ignition timing at 5°A.T.D.C.

c. Adjust the percentage of the carbon monoxide to $6.0^{+1}_{-0.5}$% at 700 r.p.m. (650 r.p.m. for automatic transmission) by turning the idle adjust screw and throttle adjust screw.

d. Check the ignition timing. Timing should remain at 5°A.T.D.C. at 700 r.p.m. (5° A.T.D.C. at 650 r.p.m. for automatic transmission).

e. Connect the air supply hose at the check valve.

f. If the engine speed changes, adjust the engine speed at 700 r.p.m. (650 r.p.m. for automatic transmission) by turning the throttle adjust screw.

MAINTENANCE

To make certain that exhaust emissions are maintained at a low level, it is recommended that inspection be basically made every 12 months or every 20,000 km (12,000 miles).

Whichever occurs first. Best engine operation and minimum exhaust emissions will be obtained with regular inspections and recommended services at these interval.

General maintenance

1. Carburetor check

Check the choke setting and adjust to specifications as required.

Proper carburetor idle mixture adjustment is imperative for best exhaust emission control. Refer to the article given in "Setting ignition timing and adjusting idle speed and mixture".

2. Distributor check

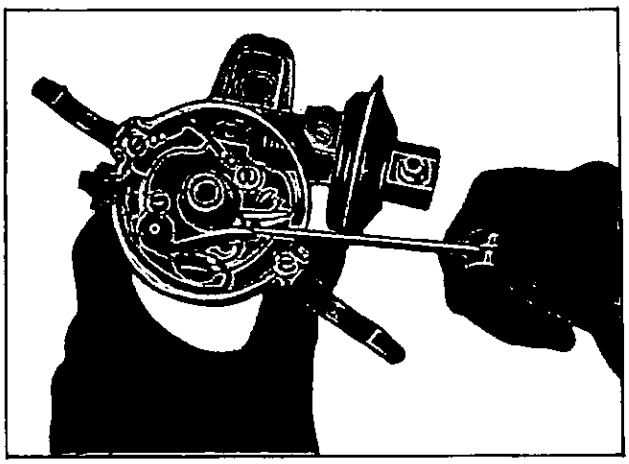

Fig. EC-21 Distributor check

Check the distributor cam dwell angle and point condition and adjust to specifications or replace as required. Check the ignition timing and adjust it to the specification.

Clean and apply distributor grease to the cam and wick.

Breaker points should be replaced at intervals not to exceed 20,000 km (12,000 miles).

3. Spark plug test

Remove and clean plugs in a sand blast cleaner. Inspect each spark plug. Make certain that they are of the specified heat range. Inspect insulator for cranks and chips. Check both center and ground electrodes. If they are badly worn, replace with new spark plugs. File center electrode flat. Set the gap to 0.80 to 0.90 mm (0.0315 to 0.0355 in.) using the proper

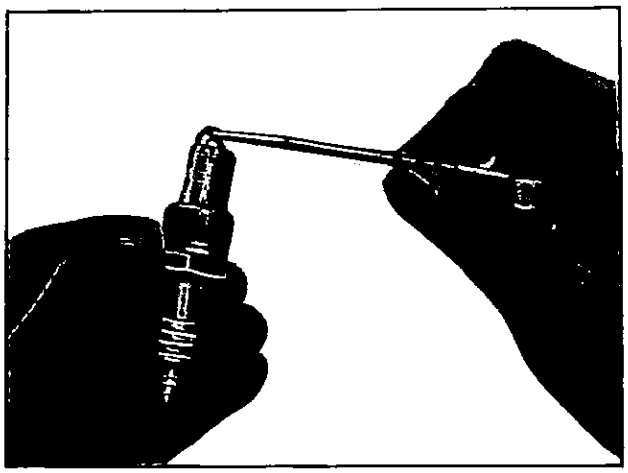

Fig. EC-22 Spark plug check

adjusting tool. Spark plug should be replaced every 20,000 km (12,000 miles).

4. High tension cable test

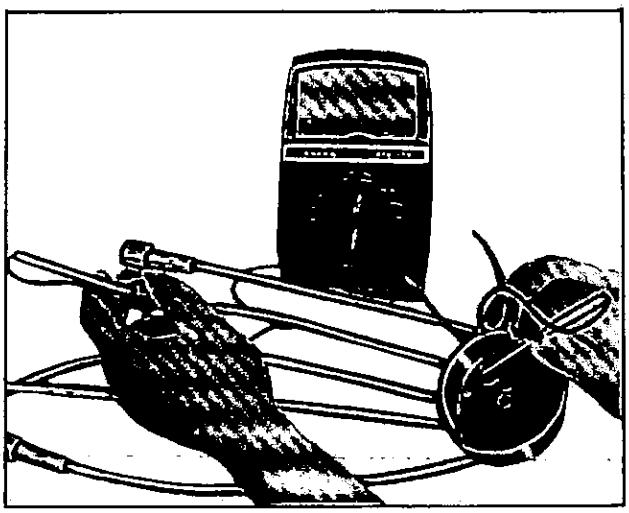

Fig. EC-23 High tension cable test

Use an ohmmeter to check resistance on secondary cables. Remove cable from spark plug and install the proper adaptor between cable and spark plug. Remove the distributor cap from the distributor with secondary cables attached. Do not remove the cables from the cap.

Connect the ohmmeter between the spark plug adaptor and the corresponding electrode inside the cap. If resistance is more than 15,000 ohms, remove the cable from cap and check cable resistance only. If resistance is still more than 15,000 ohms, replace cable assembly.

5. Battery check

Test the battery specific gravity with an accurate hydrometer. Specific gravity should be at least 1.220 or more with temperature corrections. Add mineral free water as required to bring fluid upto proper level.

Clean battery posts and cable terminals. After tightening clamps, coat the battery posts and clamps with light grease to retard corrections.

Periodic recommended maintenance

Periodic inspection and required servicing of these system should be carried out at the recommended intervals to assure a cleaner, better performing, longer-lasting engine and almost complete elimination of air pollution.

N.A.I.S.

Item	Interval
1. Engine	
Check ignition timing.	every 3,000 M
Check engine idling.	3,000
Engine tune-up.	12,000
Check spark plugs.	3,000
Replace spark plugs.	12,000
Check high tension cables.	12,000
Check for pitting and wear of distributor breaker points.	3,000
Replace distributor breaker points.	12,000
Apply grease to distributor rotor shaft.	12,000
Apply grease to distributor cam and wick.	12,000
Replace carburetor air cleaner element.	24,000
2. Crank case emission control	
Check hoses and hose connections for leaks.	12,000
Check for proper function of crankcase ventilation control valve.	12,000
3. Exhaust emission control	
Check for proper function of air pump.	12,000
Check for proper function of relief valve.	12,000
Check for proper function of check valve.	12,000
Check for proper function of anti-backfire valve.	12,000
Check air gallery and nozzle connections for leaks.	12,000
Check hoses and hose connections for leaks.	12,000
Check air pump belt tension.	3,000

SERVICE DATA AND SPECIFICATIONS

Type of crankcase emission control		Closed type	
Type of exhaust emission control		Nissan Air Injection System	
Carburetor	Make	NIHONKIKAKI	
	Model	D3034C	
	Type	Downdraft dual throat	
	Barrel	Primary	Secondary
	Bore	30 mm dia. (1.181 in. dia.)	34 mm dia. (1.339 in. dia.)
	Large venturi	23 mm dia. (0.906 in. dia.)	28 mm dia. (1.102 in. dia.)
	Small venturi 1st	7 mm dia. (0.276 in. dia.)	8 mm dia. (0.315 in. dia.)
	2nd	14 mm dia. (0.551 in. dia.)	16 mm dia. (0.630 in. dia.)
	Main jet	#102	#155
	Slow jet	# 50	# 80
	Main air bleed	# 60	# 80
	Emulsion hole	0.5 mm dia. (0.020 in. dia.) × 5	0.5 mm dia. (0.020 in. dia.) × 5
	Slow air bleed 1st	#160	–
	2nd	#150	#220
	Slow economizer	1.6 mm dia. (0.063 in. dia.)	
	Power jet	# 50	
	Cushion jet	#120	
	Air jet	#150	
	Power system	Vacuum acting type	
	Vacuum piston	9 mm dia. (0.354 in. dia.)	
	Piston spring	100 gr (0.220 lbs.) - 31 mm (1.22 in.)	
	Power valve spring	40 gr (0.0882 lbs.) - 8.6 mm (0.339 in.)	
	Actuating vacuum	-140～-110 mm Hg (-5.51～-4.33 in. Hg)	
	Accelerator pump		
	Piston	14 mm dia. (0.551 in. dia.)	
	Pump discharge	1. 0.2 c.c. (0.0122 cu. in.) 2. 0.4 c.c. (0.0244 cu. in.) 3. 0.6 c.c. (0.0366 cu. in.)	
	Pump nozzle	0.5 mm dia. (0.020 in. dia.)	

	Main nozzle	P 2.3 mm dia. (0.0906 in. dia.) S 2.8 mm dia. (0.110 in. dia.)
	Throttle valve	
	Fully closed angle	P 10° S 20°
	Idle opening	Approximately 5°
	Choke valve	
	Fully closed angle	10°
	Throttle opening at full choke	13.5°
Distributor	Make	HITACHI
	Model	D423
Spark plug		BP-6E
Air pump	Model	ECP 200-1A
	Capacity	200 c.c./rev.
Air pump pulley ratio		120 : 120 (1.00)
Relief valve opening pressure		4.2 mAq. (6 psi)
Antibackfire valve		
	Type	Air by-pass type
	Model	DV54
	Duration time	1.3 ~ 1.7 sec. at 500 Hg. (19.7 in. Hg.)
Check valve	Type	AMC type
	Opening pressure	0.15 mAq. (5.91 in. Aq.)
Cooling fan	Type	Spider
	Outer dia. × blade no.	370 mm (14.57 in. dia.) × 4
Fan coupling	Revolution ratio	Fan rpm/water pump rpm = 3,300/4,000
Pulley ratio - Fan & W/Pump		120 : 103 (1.17)
Tune up data	Basic timing	5° A.T.D.C.
	Idle r.p.m.	700 rpm (650 rpm)
	Distributor dwell angle	49° ~ 55° at 0.02 in. of point gap
	Spark plug gap	(0.0315 ~ 0.0355 in.) 0.80 ~ 0.90 mm
	Choke setting	Manual
	CO percent setting	$6.0^{+1}_{-0.5}$ % (at the pump disconnected)

TIGHTENING TORQUE

Nut - air pump bracket to cylinder head Bolt - adjusting bar to bracket Bolt - air pump to bracket Nut - air pump to adjusting bar	1.60 ~ 2.40 kg-m (11.6 ~ 17.4 ft. lb.)
Nut - A. B. valve bracket to rocker cover Screw - A. B. valve to bracket Nut - vacuum sensing hose clamp to rocker cover	0.40 ~ 0.65 kg-m (2.9 ~ 4.7 ft. lb.)
Screwed plug - air gallery to exhaust manifold	5.0 ~ 6.0 kg-m (36.2 ~ 43.4 ft. lb.)
Check valve to air gallery	9.0 ~ 10.5 kg-m (65.1 ~ 75.9 ft. lb.)

AIR PUMP DRIVE BELT SLACKNESS

8 ~ 12 mm (0.315 ~ 0.472 in.) of slack under
7 ~ 10 kg (1.54 ~ 2.20 lb.) of load.

SERVICE JOURNAL OR BULLETIN REFERENCE

DATE	JOURNAL or BULLETIN No.	PAGE No.	SUBJECT

DATSUN 1800

SERVICE MANUAL

MODEL G18

ENGINE

NISSAN MOTOR CO., LTD.

TOKYO, JAPAN

SECTION EE

ENGINE ELECTRICAL SYSTEM

STARTING CIRCUIT ..... EE -1
STARTING MOTOR ..... EE -1
CHARGING CIRCUIT EE-12
ALTERNATOR EE-14
REGULATOR EE-26
IGNITION CIRCUIT EE-30
DISTRIBUTOR EE-30
IGNITION COIL EE-40
SPARK PLUGS EE-41

EE

STARTING CIRCUIT

The electrical system operates on 12 volts. This section of the manual is subdivided into the following sections which pertain to engine electrical.

1. Starting motor 2. Alternator 3. Regulator 4. Ignition coil 5. Spark plugs

Information pertaining to body electrical, such as the lighting circuit, instrument and windshield wipers will be found in section BE.

STARTING MOTOR

CONTENTS

SPECIFICATION ..... EE- 1
DESCRIPTION ..... EE- 2
OPERATION ..... EE- 2
CONSTRUCTION ..... EE- 3
REMOVAL ..... EE- 3
DISASSEMBLY ..... EE- 3
CLEANING AND INSPECTION ..... EE- 5
Terminal ..... EE- 5
Field coil ..... EE- 5
Brushes and brush lead wire ..... EE- 6
Brush spring tension ..... EE- 6
Armature assembly ..... EE- 6
Over-running clutch assembly ..... EE- 7
Brush holder test for ground ..... EE- 7
Pinion case bearing metal ..... EE- 8
Magnetic switch assembly ..... EE- 8
ASSEMBLY ..... EE- 8
TEST ..... EE- 8
Performance test ..... EE- 8
Diagnosis of test ..... EE- 9
Magnetic switch assembly test ..... EE- 9
SERVICE DATA EE-10
TROUBLE DIAGNOSES AND CORRECTIONS EE-11

SPECIFICATION

Type	HITACHI S114-104
Voltage	12V
Output	1.0 KW
Starting current (voltage)	Less than 480 Amps. (6V)
Lock torque	More than 1.15 kg-m (8.31 ft. lb.)
No load current (voltage)	Less than 60 Amps. (12V)
No load starter revolution	More than 7,000 rpm
Shift type of pinion gear	Magnetic shift

Number of teeth on pinion gear	9
Number of teeth on ring gear	120
Weight	5.3 kg (11.68 lbs.)

DESCRIPTION

The starting system permits the engine to be cranked by turning the ignition switch to "start" position. While the ignition switch is turned to "start" position the starting motor continues operation until the engine starts running on its own power, then the starting motor current is opened and the motor is disengaged by turning the ignition switch on to "ON" position. This starting motor utilizes an enclosed over-running clutch type and the compound motor as described following. The solenoid switch is mounted onto the yoke.

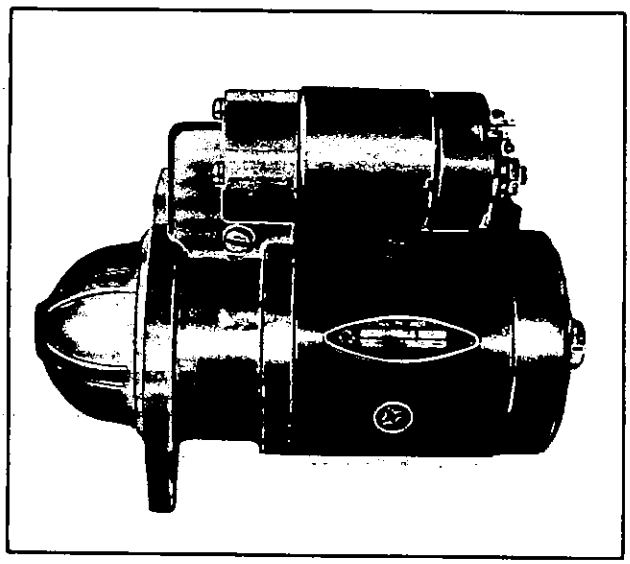

Fig. EE-1 S114-104

OPERATION

When the ignition switch is turned on to "start" position, current flows through the "series" and "shunt" coils of the solenoid and magnetize the solenoid. The plunger is pulled into the solenoid so that it operates the shift lever to move the drive pinion into engagement with flywheel ring gear and then closes the solenoid switch.

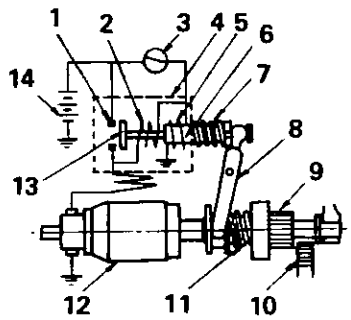

1	Stationary contact	8	Shift lever
2	Series coil	9	Drive pinion
3	Ignition switch	10	Ring gear
4	Solenoid	11	Pinion sleeve spring
5	Shunt coil	12	Armature
6	Plunger	13	Movable contactor
7	Return spring	14	Battery

Fig. EE-2 Starting motor circuit

Closing of the contacts (stationary and movable) causes the motor to crank the engine and also cuts out the "series" coil of the solenoid, the magnetic pull of the "shunt" coil being sufficient to hold the pinion in mesh after the shifting has been performed.

After the cranking, and when the ignition switch is turned to "ON" position, the "series" coil demagnetizes against the "shunt" coil, then the return spring actuates the plunger to return to the original position, consequently stops the motor. More positive meshing and demeshing of the pinion and the ring gear teeth are secured by means of the over-running clutch. The over-running clutch employs a shift lever to slide the pinion along the armature shaft and into, or out of, mesh with the ring gear teeth. The over-running clutch is designed to transmit driving torque from the motor armature to the ring gear, but permit the pinion to over-run the armature after the engine has started.

CONSTRUCTION

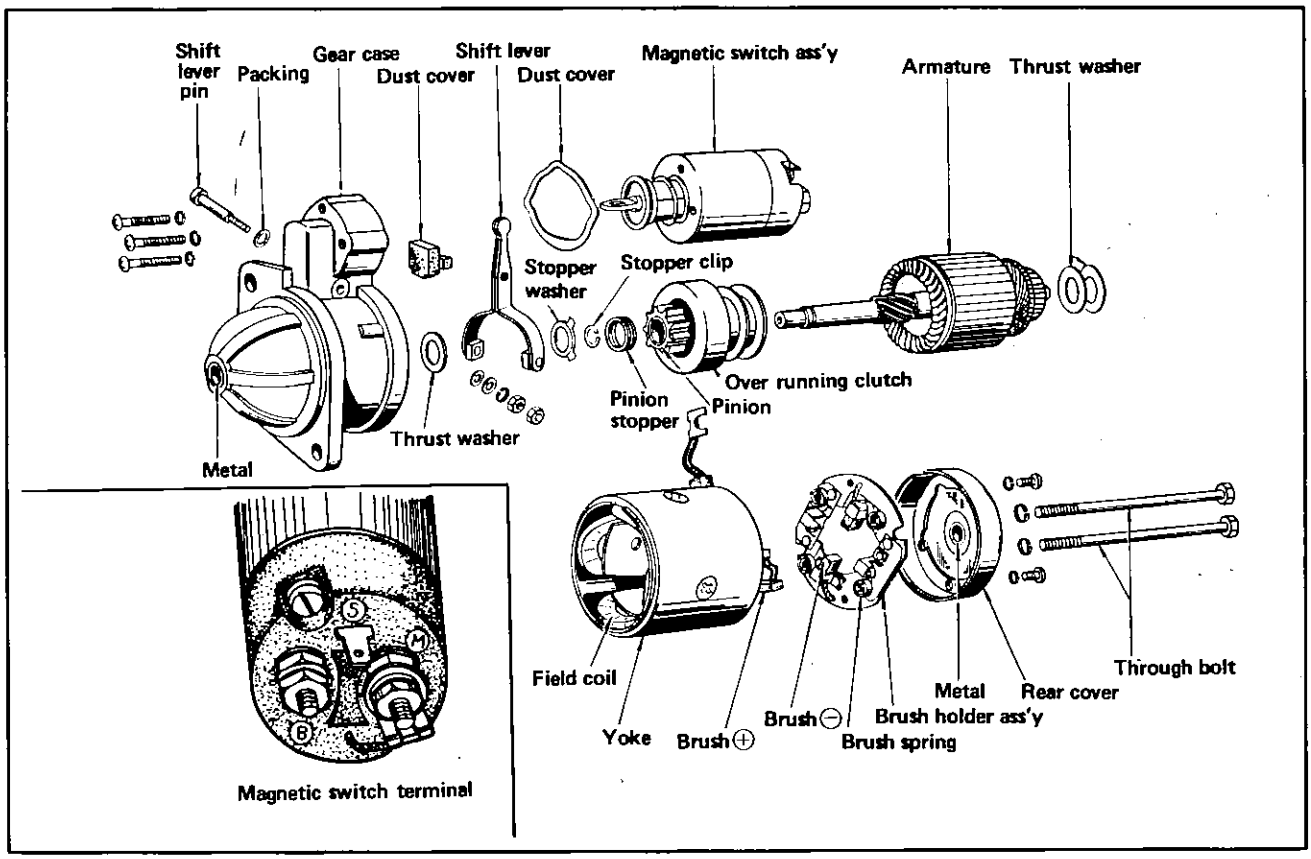

Fig. EE-3 S114-104 Construction

REMOVAL

1. Disconnect the battery ground cable.
Disconnect the black wire with yellow tracer from the magnetic switch terminal, and black battery cable from the magnetic battery terminal.

2. Remove two bolts securing the starting motor to the clutch housing. Pull starter assembly forward and remove starting motor.

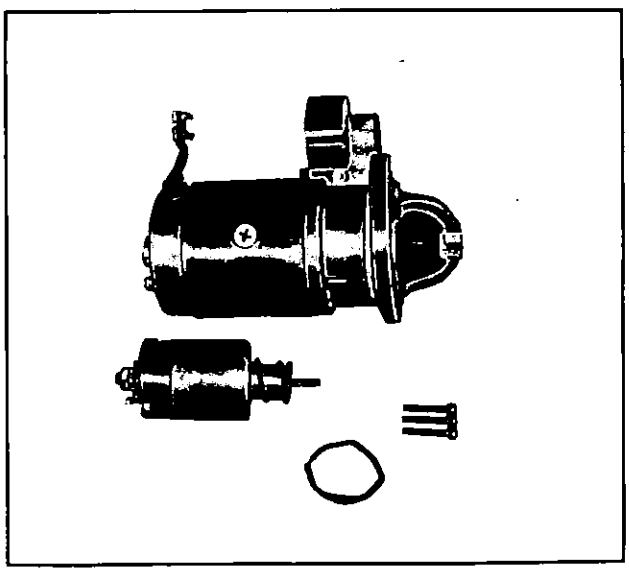

Fig. EE-4 Removing magnetic switch assembly

DISASSEMBLY

1. Loose the nut securing the connecting plate to the magnetic switch "M" terminal. Remove three screws securing magnetic switch and remove magnetic switch assembly.

2. Remove two through bolts and brush cover assembly.

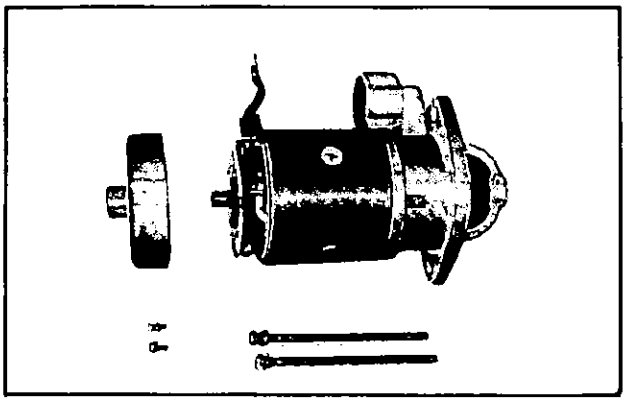

Fig. EE-5 Removing the brush cover

3. Remove the yoke assembly by hitting lightly with a wooden hammer.

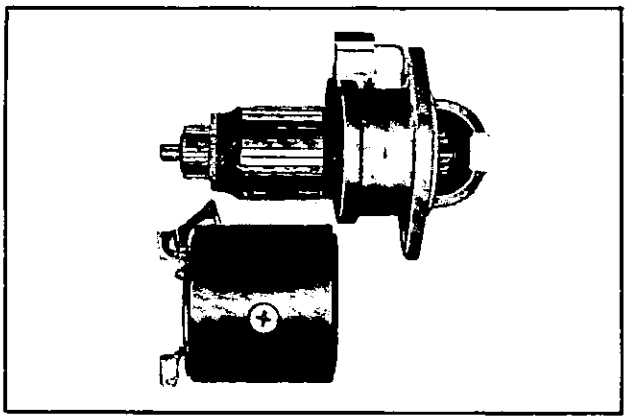

Fig. EE-6 Removing the yoke assembly

4. Withdraw the armature assembly and shift lever.

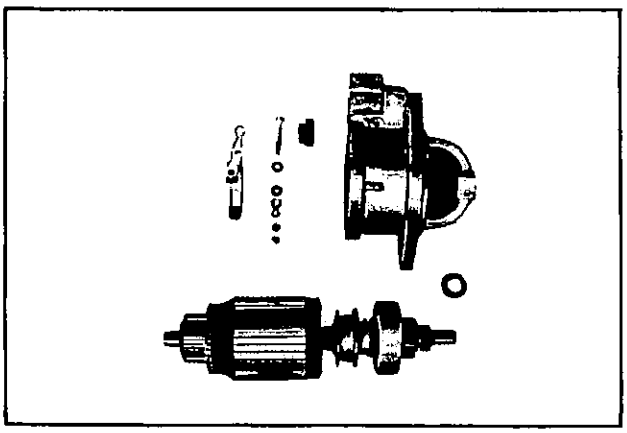

Fig. EE-7 Removing the armature assembly and shift lever

5. Remove the pinion stop ring located at the end of the armature shaft. To remove the stop ring, firstly push the stop ring to the clutch side and then, after removing the snap ring, remove the stop ring with the over-running clutch. Withdraw the over-running clutch assembly from the armature shaft.

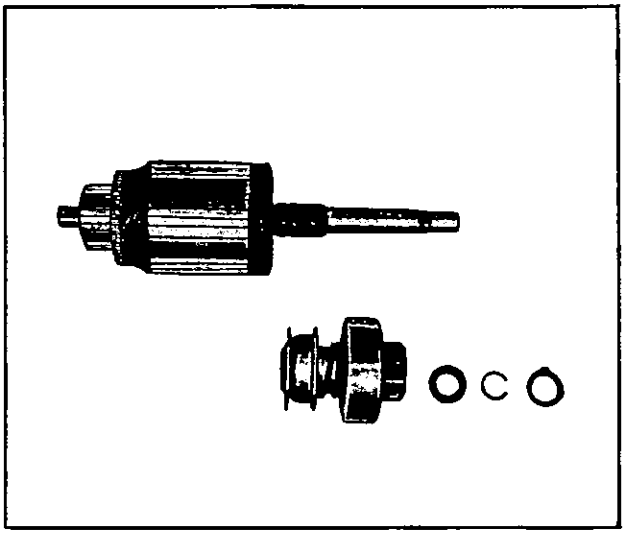

Fig. EE-8 Removal of the over-running clutch assembly

6. Dissolder the brushes, using a soldering-iron and remove each brush.

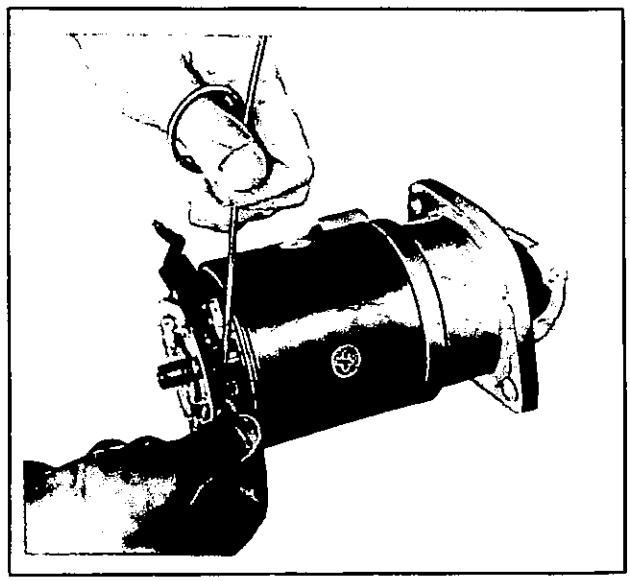

Fig. EE-9 Removing brush

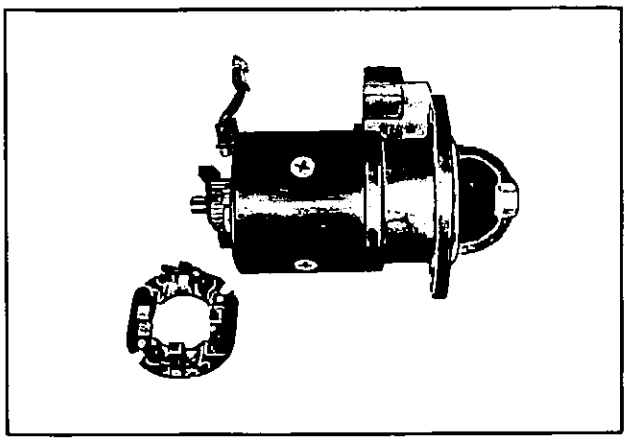

Fig. EE-10 Removing brush holder

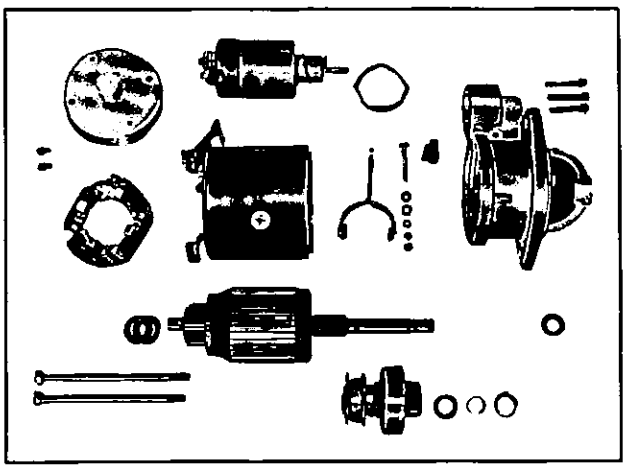

Fig. EE-11 Disassembly

CLEANING AND INSPECTION

Clean all disassembled parts, but do not use grease dissolving solvents for cleaning the over-running clutch, armature assembly, magnetic switch assembly and field coils since such a solvent would dissolve the grease packed in the clutch mechanism and would damage the coils or other insulators.

Check them for excessive damage or wear, and they should be replaced if necessary.

Terminal

Check for damage and wear, and replace if necessary.

Field coil

Check the field coil insulation. If the insulation of the coil is damaged or worn it should be replaced.

Field coil test for continuity:

Connect the test probe of a circuit tester or an ohmmeter to field coil terminals.

If the tester shows no conduction the field circuit or coil is open.

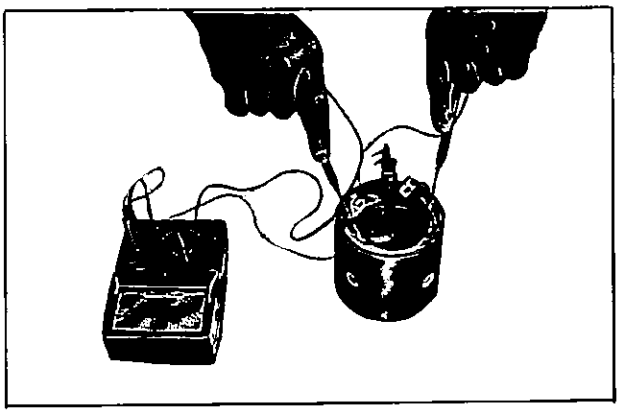

Fig. EE-12 Field coil test for continuity

Field coil test for ground:

Place one probe of the circuit tester onto the yoke and the other on to the field coil lead (positive terminal).

If very little resistance is read, the field coils are grounded.

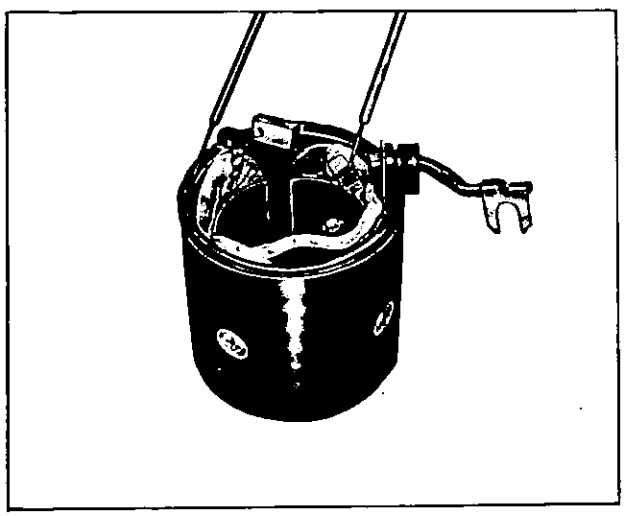

Fig. EE-13 Field coils test for ground

Field coil test for short:

Dissolder the connecting section of each coil and proceed to the same mentioned above.

If a defective coil is found, it should be replaced.

Brushes and brush lead wire

Check the condition of the brush contact surface and wear of the brush. If a loose contact may be found it should be replaced.

If the brush in its length is less than 12.5 mm (0.4921 in.), replace it.

Check the connection of the lead clip and lead wire.

Check brush holders and spring clip to see that they are not deformed or bent, but will properly hold brushes against the commutator.

If the brushes or brush holders are dirty, they should be cleaned.

Brush spring tension

Check the brush spring tension by a spring scale as shown in Figure EE-14. The reading should be 0.8 kg (1.76 lbs.). Replace the spring if the tension is lower than 0.7 kg (1.54 lbs.).

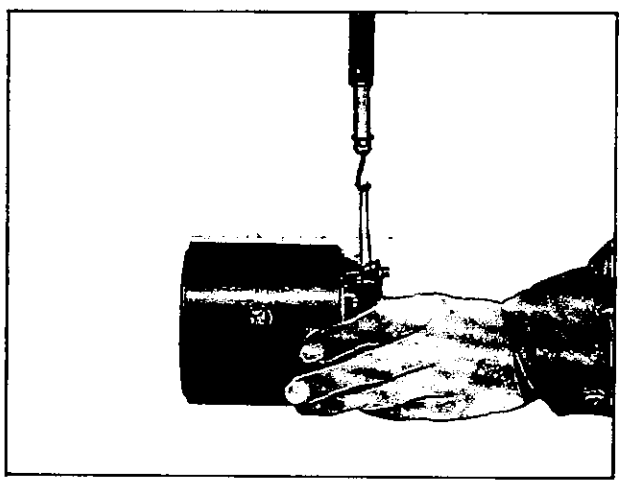

Fig. EE-14 Inspection of brush spring tension

Armature assembly

Check external appearance of the armature and the commutator.

1. Measure the armature shaft for bend by a dial gauge. Replace the armature shaft if the bend exceeds 0.08 mm (0.0031 in.).

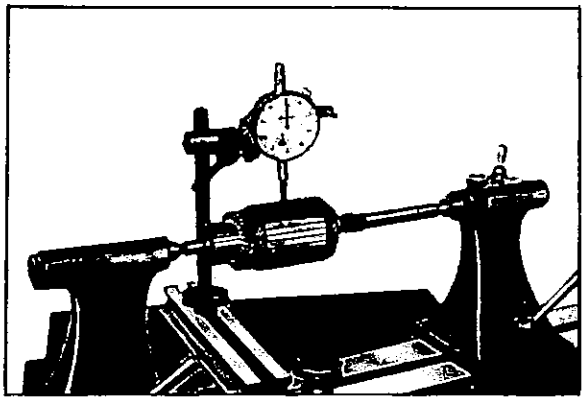

Fig. EE-15 Inspection of armature shaft for bend

2. Inspect the commutator. If the surface of the commutator is rough, it must be sanded lightly with a No. 00 sandpaper. The commutator must be checked also for out-of-round. If the out-of-round is more than 0.2 mm (0.0079 in.), or the depth of the insulating mica is less than 0.2 mm (0.0079 in.) from the commutator surface, the commutator (armature) should is less than 0.05 mm (0.0020 in.). Insulating mica should be also under-cut so that the depth of it is from 0.5 to 0.8 mm (0.0197 to 0.0315 in.).
The wear limit of the commutator diameter is 2 mm (0.0787 in.). If the commutator is beyond repair, replace it.

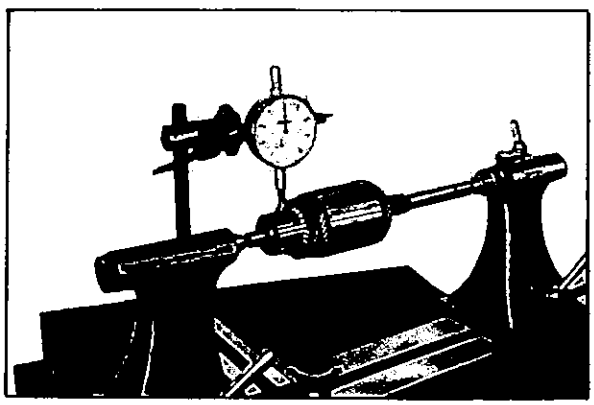

Fig. EE-16 Inspection of commutator

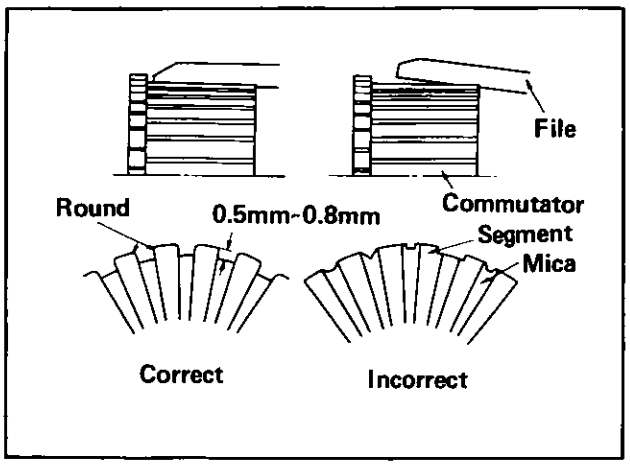

Fig. EE-17 Undercutting insulating mica

3. Inspect the soldered connection of armature lead and commutator. If the loose connection is found, solder it using rosin flux.

4. Armature test for ground

Using a circuit tester, place one test probe on to armature shaft and other on to each commutator bar.

If the tester shows conductive, armature is grounded and must be replaced.

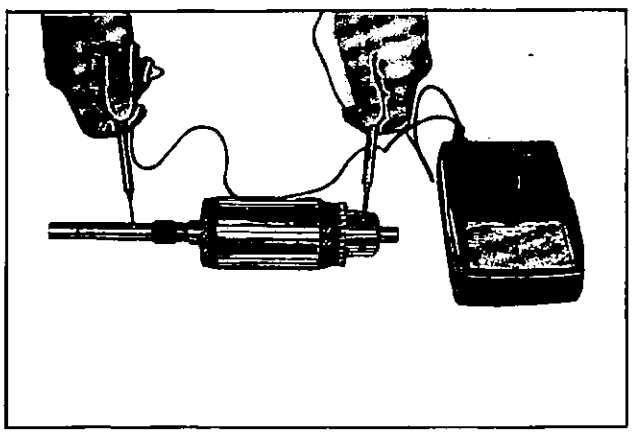

Fig. EE-18 Armature test for ground

5. Check armature for shorts by placing on the armature tester and with hack saw blade over armature core, rotate armature. If saw blade vibrates, armature is shorted.

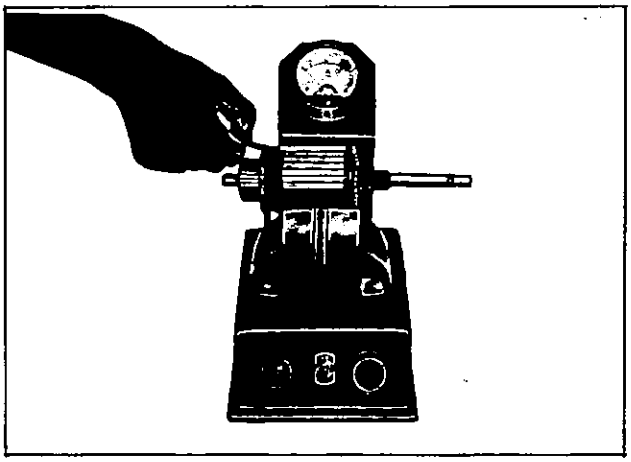

Fig. EE-19 Armature test for short

6. Check armature for continuity by placing the probes of tester on two segments side by side. If the tester shows no conduction, the circuit is open.

Over-running clutch assembly

Inspect the pinion assembly and screw sleeve. Screw sleeve must be freely slid along the armature shaft splined. If damages are found or resistance would be felt when sliding, it must be repaired. Inspect the pinion teeth. If excessive rubbing would be found on the teeth, it should be replaced. The flywheel ring gear also must be inspected.

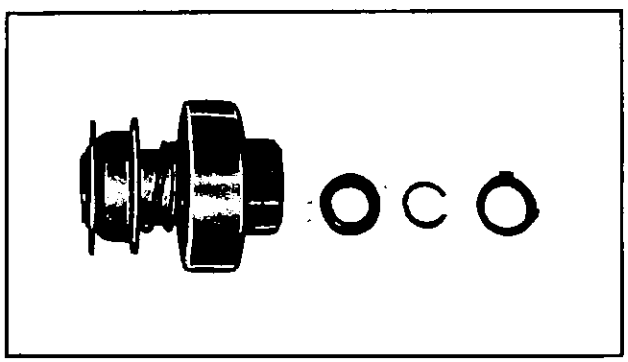

Fig. EE-20 Over-running clutch assembly

Brush holder test for ground

Using a circuit tester, place one test probe on to rear cover and another on to positive side brush holder. If the tester shows conduction

the brush holder is shorted to ground. Replace an insulator or brush holder.

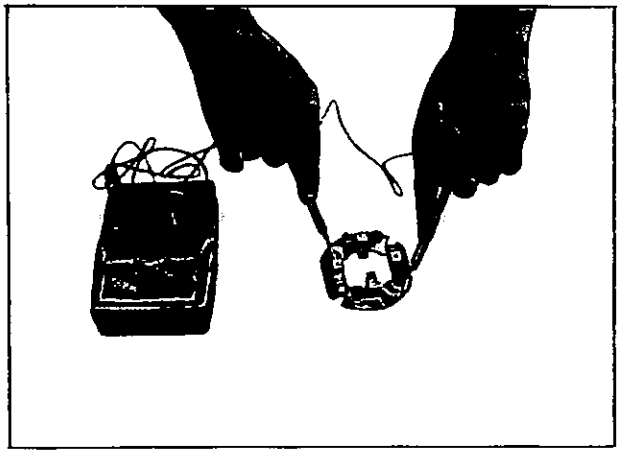

Fig. EE-21 Brush holder test for ground

Pinion case bearing metal

Inspect the bearing metal for wear or side play. If the clearance between the bearing metal and the armature shaft is more than 0.2 mm (0.0079 in.), replace the metal. Press in a new bearing and adjust the clearance to 0.03 to o.10 mm (0.0012 to 0.0039 in.). The bearing metal should be so pressed in that the end of the bearing metal would be equal to gear case end plane.

Magnetic switch assembly

Inspect the magnetic switch contacts. If a rough welding be found on the contact it should be repaired.

ASSEMBLY

Assembling is a reversal of the disassembly procedure.

When assembling, pack the grease in the rear case and apply light coat of oil to the rear cover bearing metal and pinion.

TEST

Performance test

The starter motor should be subjected to a "no-load" and a "lock-torque" test whenever it has been overhauled to ensure that its performance will be satisfactory when installed to the engine. The starter motor should also be subjected to these tests when the cause of abnormal operation is to be determined. A brief outline of the two tests is given below.

No-load test

Connect the starting motor in series with the specified (12 volts) battery and an ammeter capable of indicating 1,000 amperes.

Specified current draw and revolution in these test are shown in "specification".

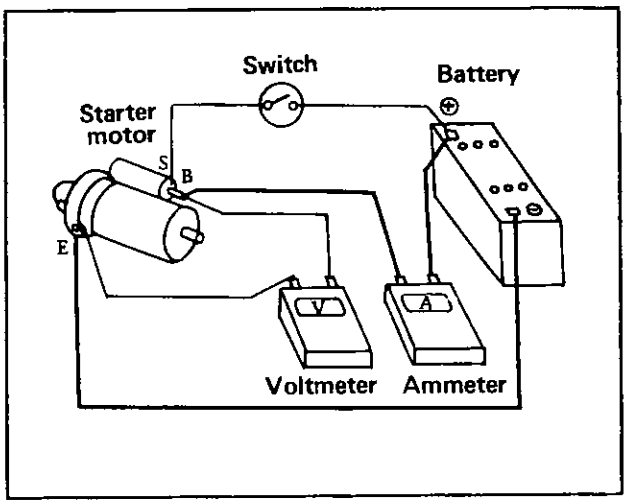

Fig. EE-22 No-load test

Torque test

Torque testing equipment should be used to determine the torque the motor will develop. A high current carrying variable resistance should be connected into the circuit so that the specified voltage at the starting motor may be obtained, since a small variation in the voltage will produce a marked difference in the torque development.

Specified power, voltage and torque are shown in Figure EE-23.

≪Performance curve≫

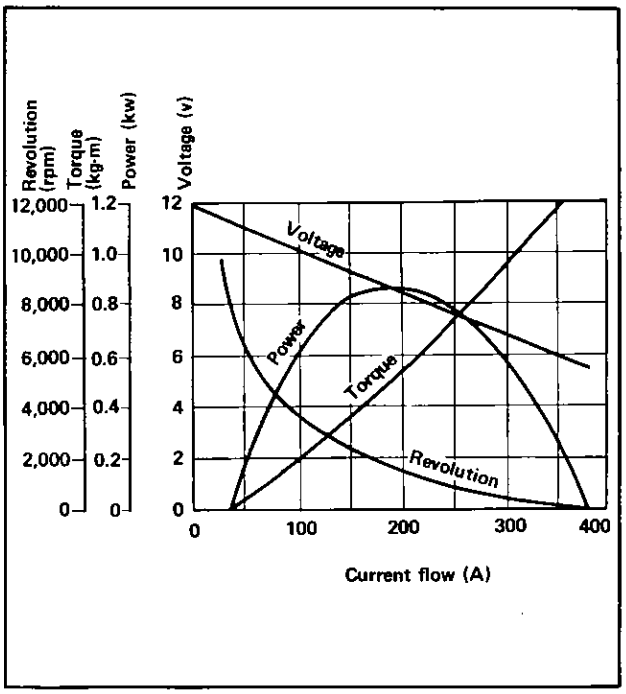

Fig. EE-23 S114-104

Diagnosis of test

1. Low speed with no-load and high current draw may result from followings.

(1) Tight, dirty or worn bearings

(2) Bent armature shaft or loosen field probe

(3) Shorted armature;

Check armature further.

(4) A ground armature of field;

Remove copper connector. Remove negative side brush and insulate it from the commutator before inspection. Using a circuit tester, place one probe on insulated terminal and another on rear cover. If the tester indicates conduction, remove other two brushes and check fields and armature separately to determine whether it is the fields or armature that is grounded.

2. Failure to operate with high current draw may result from followings.

(1) A grounded or open field coil;

Inspect the connection and trace the circuit by a circuit tester.

(2) The armature coil does not operate;

Inspect the commutator for excessive burned out. In this case, arc may occur on defective commutator, when the motor is operated with no-load.

(3) Burned out commutator bar;

Weak brush spring tension, broken brush spring, rubber brush, thrust out of mica in the commutator or a loose contact brush and commutator would cause to burn the commutator bar.

3. Low torque, low current draw and low no-load speed would cause high internal resistance due to loose connections, defective leads, dirty commutator and causes listed on item 2-(3).

4. High no-load speed with low developed torque would cause grounded field coil. Replace the field coil and check for improvement in performance.

Magnetic switch assembly test

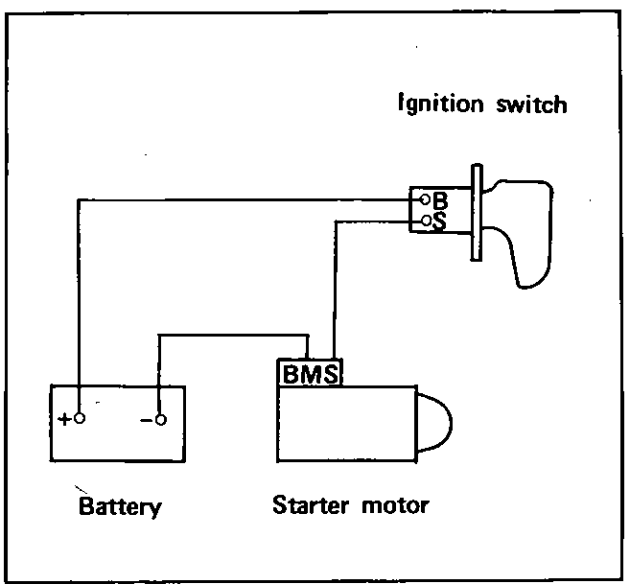

Fig. EE-24 Circuit of magnetic switch assembly test

If the starting motor check is "OK", check the magnetic switch assembly. Connect jumper cables between the "negative" battery terminal and the starting motor "M" terminal, the "positive" battery terminal and the starting motor "S" terminal connecting ignition switch in series as shown in Figure EE-24.

With the ignition switch on, measure the gap "ℓ" between the pinion front edge and the pinion stopper.

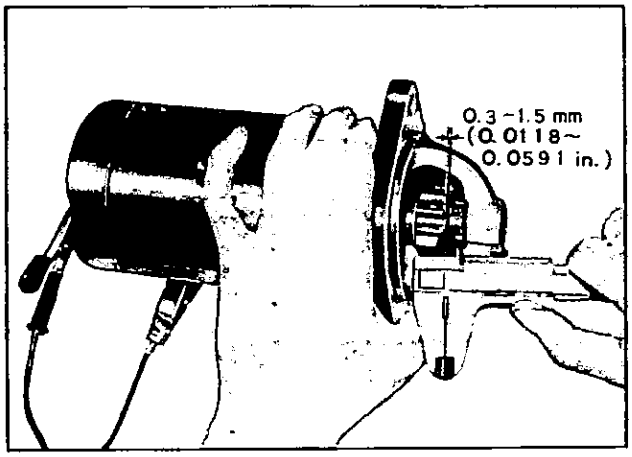

Fig. EE-25 Measurement of gap "ℓ"

SERVICE DATA

≪S114-104≫

Armature shaft diameter (pinion side)	$11.0\frac{-0.032}{-0.050}$ mm ($0.4331\frac{-0.0013}{-0.0020}$ in.)
Armature shaft diameter (rear end)	$11.5\frac{-0.032}{-0.050}$ mm ($0.4528\frac{-0.0013}{-0.0020}$ in.)
Amendment limit of shaft diameter	0.1 mm (0.0039 in.)
Amendment limit of shaft bent	0.08 mm (0.0031 in.)
Clearance between shaft and bush	0.03 ~ 0.1 mm (0.0012 ~ 0.0039 in.)
Amendment limit of dittoed clearance.....	0.2 mm (0.0079 in.)
Outer diameter of commutator	35.0 mm (1.3780 in.)
Wear limit of commutator diameter	2.0 mm (0.0787 in.)
Brush length	18.5 mm (0.7283 in.)
Wear limit of dittoed length	6.0 mm (0.2362 in.)
(remaining brush should be more than) ..	12.5 mm (0.4921 in.)
Brush spring tension	0.8 kg (1.76 lbs.)
Front bracket metal inner diameter	$11.0\frac{+0.018}{0}$ mm ($0.4331\frac{+0.0007}{0}$ in.)
Rear cover metal inner diameter	$11.5\frac{+0.021}{0}$ mm ($0.4528\frac{+0.0008}{0}$ in.)

TROUBLE DIAGNOSES AND CORRECTIONS

Troubles	Possible causes	Remedies
Starting motor will not operate.	Discharged battery.	Charge or replace the battery.
	Defective solenoid switch.	Repair or replace the solenoid switch.
	Loosen connections of the terminal.	Clean and tighten the terminal.
	Defective brushes.	Replace the brush.
	Defective starting motor.	Remove the starting motor and make test.
Noisy starting motor.	Loose securing bolt.	Tighten the bolt.
	Worn pinion gear.	Replace the pinion gear.
	Poor lubrication.	Fill in oil.
	Worn commutator.	Disassemble the motor.
	Worn brushes.	Replace the brush.
Starting motor cranks slowly.	Discharged battery.	Charge or replace the battery.
	Loose connection of the terminal.	Clean and tighten the terminal.
	Worn brushes.	Replace the brush.
	Locked brushes.	Inspect the brush spring tension or repair the brush holder.
	Dirty or worn commutator.	Clean and repair.
	The armature rubs the field coil.	Disassemble the motor.
	Defective solenoid switch.	Repair or replace the switch.
Starting motor operates but does not crank the engine.	Worn pinion.	Replace the pinion.
	Locked pinion guide.	Repair the pinion guide.
	Worn ring gear.	Replace the ring gear.
Starting motor will not disengage even the ignition switch is turned off.	Defective solenoid switch.	Repair or replace the solenoid switch.
	Defective gear teeth.	Replace the defective gear.

CHARGING CIRCUIT

The charging circuit includes the battery, alternator, regulator and necessary wiring to connect these parts. The purpose of this system is to convert just enough mechanical energy from the engine into electrical energy to supply all electrically operated units and keep the battery fully charged.

SPECIFICATIONS

Alternator

Item \ Model	AS2030B1	AS2040P
Applied engine	G18	G18 (option)
Maker	MITSUBISHI	MITSUBISHI
Nominal output	14 V - 30 A	14 V - 40 A
Pole	Negative ground	Negative ground
Revolution	1,000 ~ 12,000 rpm	1,000 ~ 12,000 rpm
No-load minimum revolution	Less than 1,000 rpm	Less than 1,000 rpm
Output current	30 A (14 V, 5,000 rpm)	40 A (14 V, 5,000 rpm)
Pulley ratio	2.04	2.04

Regulator

Item \ Model	RQA2220B
Applied alternator	AS2030B1, AS2040P
Applied engine	G18
Maker	MITSUBISHI
Type	Tirril type
Element	Constant voltage relay and pilot lamp relay.
Constant voltage relay	3 contact point type
No load regulating voltage	14.3 ~ 15.3 V 4,000 rpm [20° C (68° F)]

When the ignition switch is turned "on", current flows from the battery to ground through the ignition switch, voltage regulator IG terminal, primary side contact point "P1", movable contact point "P2", voltage regulator "F" terminal, alternator "F" terminal, field coil and alternator "E" terminal, as shown by the heavy arrows. Then the rotor in the alternator is exited. On the other hand, current flows from the battery to ground through the ignition switch, warning lamp, voltage regulator "L" terminal, lamp side contact point "P4", movable contact point "P5", and voltage regulator "E" terminal, as shown by dotted arrows. Then the warning lamp turns on.

When the alternator begins to operate, three phase alternating current is induced in the armature. This alternating current is rectified by the positive and negative silicon diodes. This rectified current of direct current output comes between the alternator "B" and "E" terminal. (Figure EE-26)

On the other hand, the neutral point voltage comes between "N" and "E" terminal (nearly a half of the output voltage) and this causes to flow the current from voltage regulator "N" terminal to "E" terminal or ground through the coil "VC1" as shown by the dotted arrows. Then the coil "VC1" is excited, and the movable contact point "P5" comes in contact with voltage winding side contact point "P6". This action causes to turn off the warning lamp and complete the voltage winding circuit, as shown by the heavy arrows.

When the alternator speed is increased or the voltage starts to go too high, the movable contact point "P2" is separated from primary side contact "P1" by the magnetic force of coil "VC2". Therefore, register "R1" is inserted in the field circuit and output voltage is decreased. As the output voltage is decreased, the movable contact point "P2" and primary side contact "P1" comes in contact once again, and the alternator voltage increases. Thus, the rapid vibration of the movable contact point "P2", or inserting and removing the resistance in the alternator field circuit maintains an alternator output voltage to constant.

When the alternator speed is increased further or the voltage starts to go further high, at last the movable contact point "P2" comes in contact with secondary side contact point. Then the field current is shut off and alternator output voltage is decreased immediately. This action causes to separate movable contact "P2" from secondary contact "P3". Thus, the rapid vibration of the movable contact point "P2" or breaking and completing the field circuit maintains an alternator output voltage to constant.

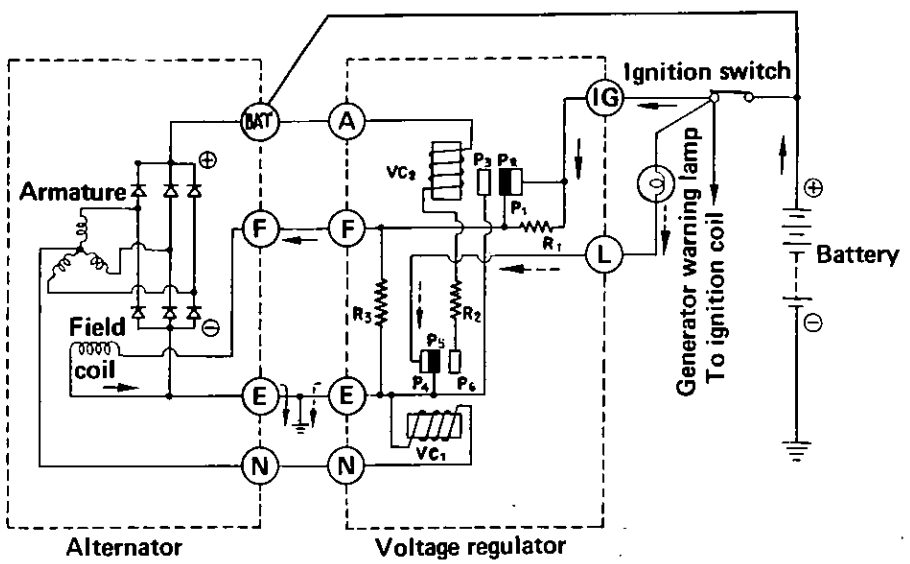

Fig. EE-26 Charging circuit (1)

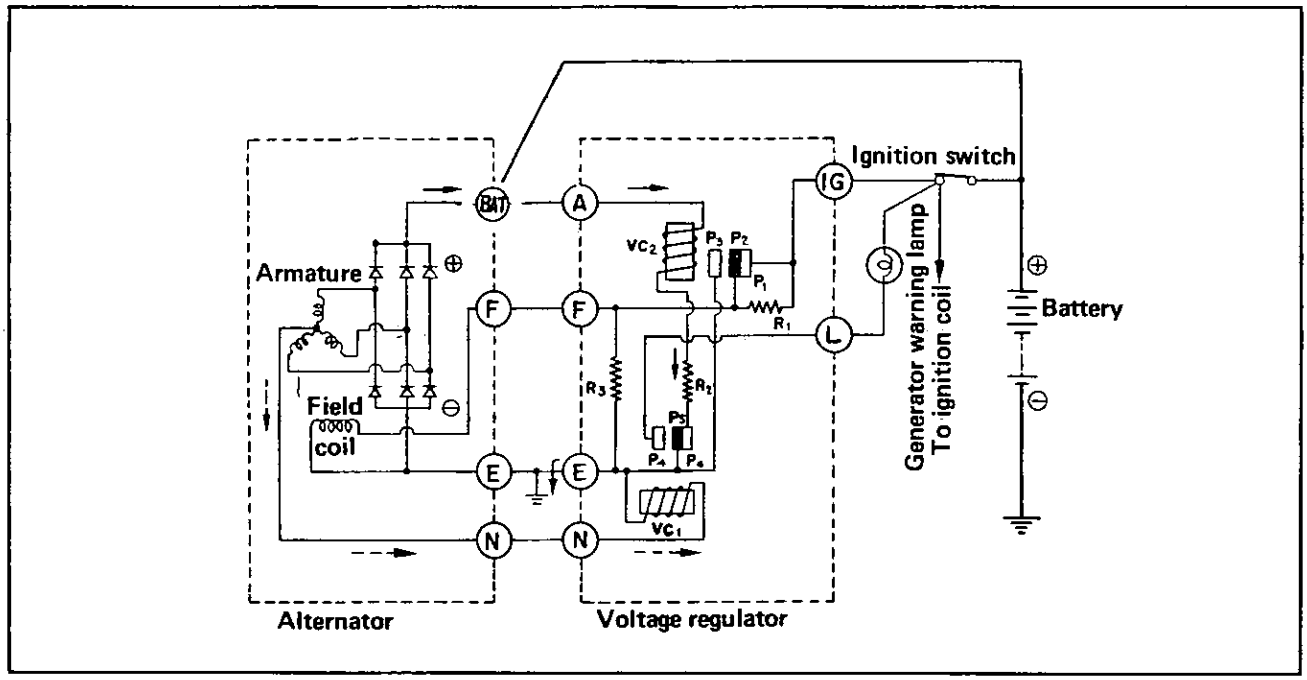

Fig. EE-27 Charging circuit (2)

ALTERNATOR

CONTENTS

DESCRIPTION EE-14
REMOVAL EE-15
DISASSEMBLY EE-18
DIODE REMOVAL EE-20
DIODE INSTALLATION EE-21
INSPECTION AND REPAIR EE-21
Rotor inspection EE-21
Inspection of stator EE-22
Inspection of diode EE-22
Inspection of diode with tester EE-23
Inspection of brush EE-24
Spring pressure test EE-24
Inspection of output EE-24
ASSEMBLY EE-25
In case of AS2030B1 ..... EE-25
In case of AS2040P EE-25

DESCRIPTION

Different from the DC generator, an alternator turns the magnetic pole and fixes the armature. In the alternator a magnetic field is produced by the rotor which consists of alternator shaft, field coil, pole pieces, and slip rings. The slip ring pressed in the shaft conducts only a small field current. Output current is generated in armature coils located in the stator. The stator has three windings and generates three-phase alternating current. Silicon diodes act like one way valves for electricity, so that charging current passes easily but reverse current is shut out. In this alternator, six diodes are used three negatives and three positives, and these six diodes are installed in positive and negative heat sink, voltage control system is also basically same to D. C. system in principle.

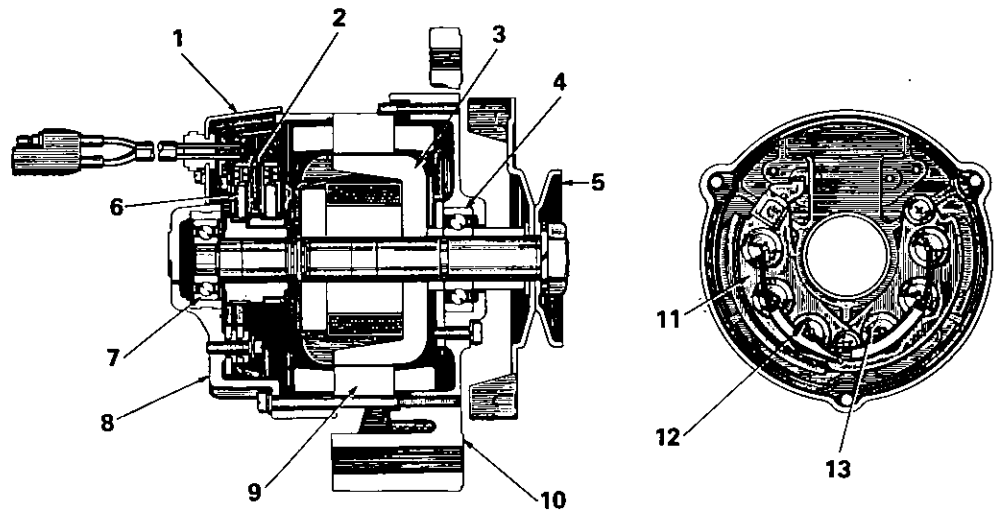

1.	Brush cover	5.	Pulley	8.	Rear cover	11.	Heat sink assembly
2.	Brush holder	6.	Brush	9.	Stator assembly	12.	Positive diode
3.	Rotor assembly	7.	Ball bearing	10.	Front cover	13.	Negative diode
4.	Ball bearing						

Fig. EE-28 Schematic view (AS2030B1)

REMOVAL

1. Disconnect the negative battery terminal.
2. Remove two leads at the alternator and connector.
3. Loosen the adjusting bolt.
4. Remove the alternator drive belt.
5. Remove the bolts which retain the alternator.
6. Remove the alternator from a car.

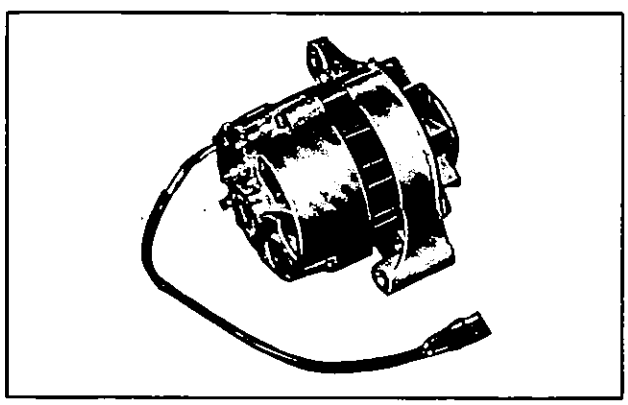

Fig. EE-29 AS2030B1

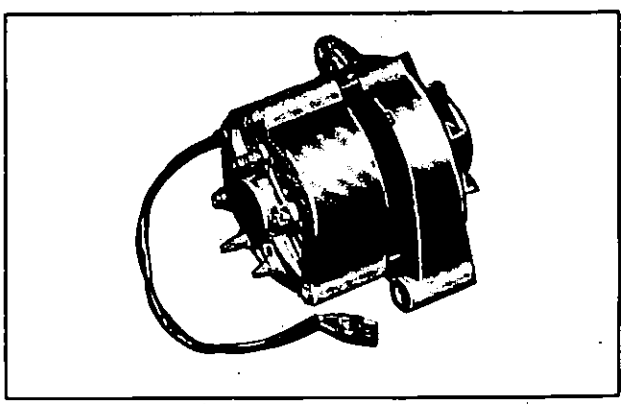

Fig. EE-30 AS2040P

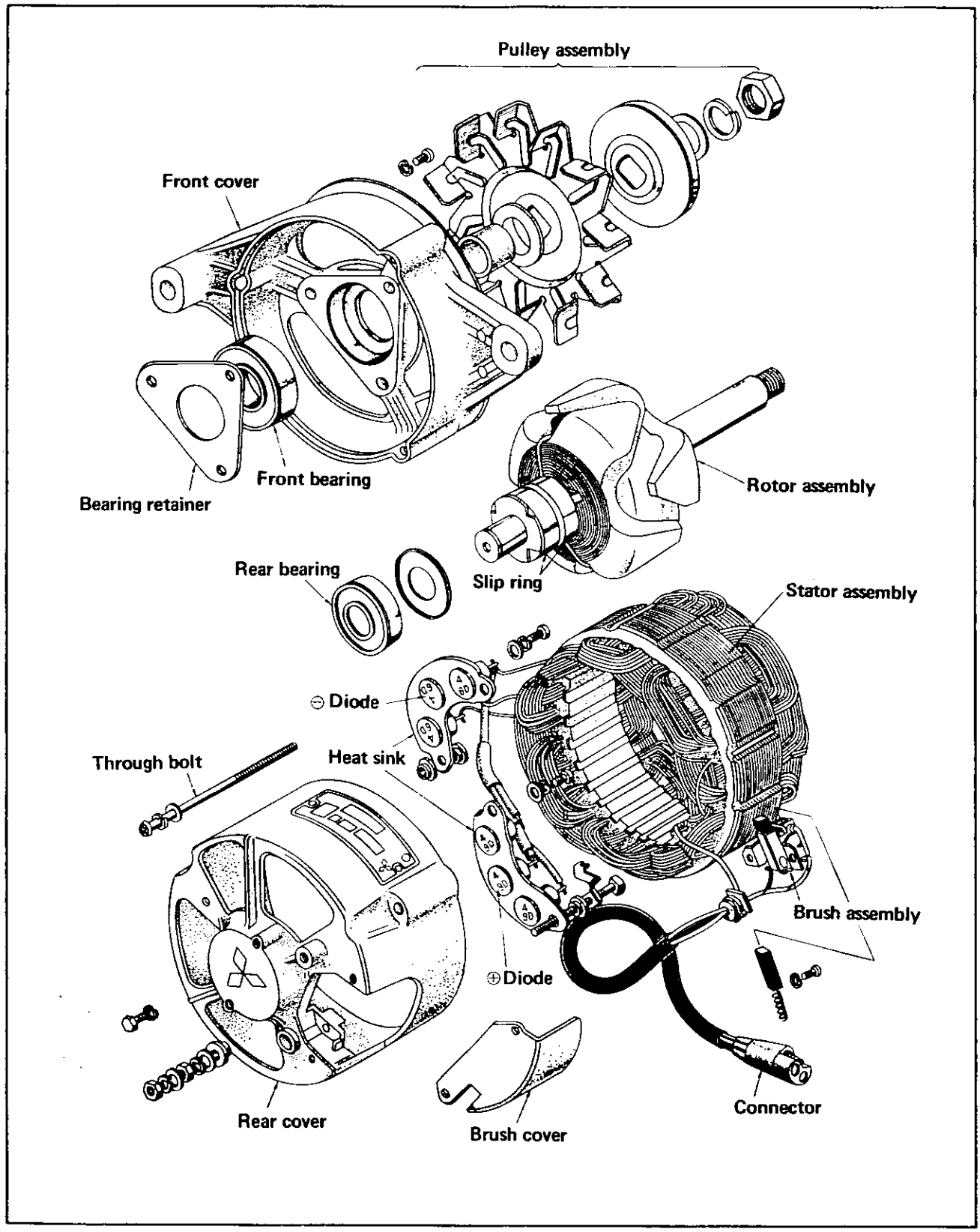

Fig. EE-31 Alternator assembly (AS2030P1)

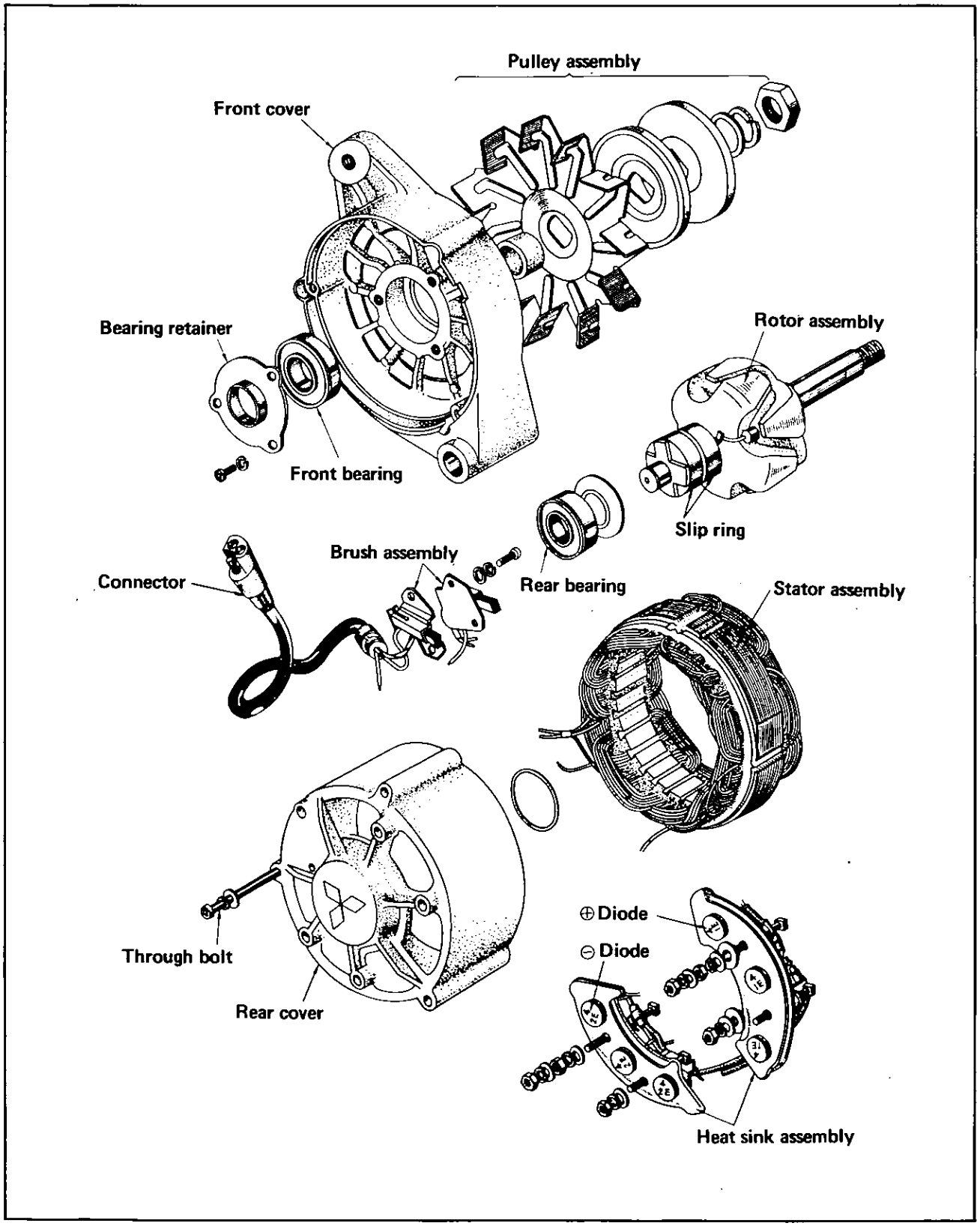

Fig. EE-32 Alternator assembly (AS2040P)

DISASSEMBLY

1. Unscrew the through bolts.

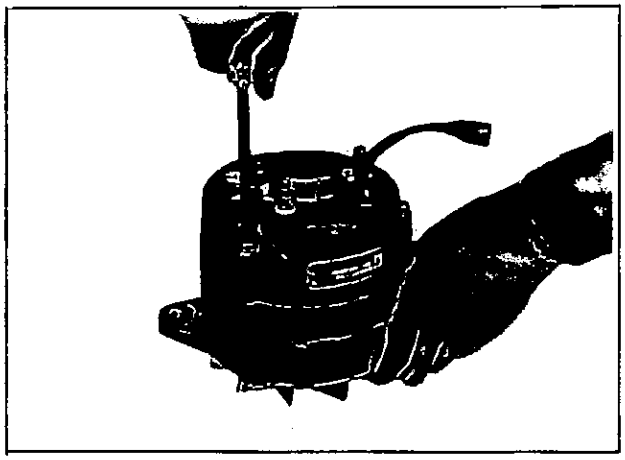

Fig. EE-33 Removal of through bolt (1)

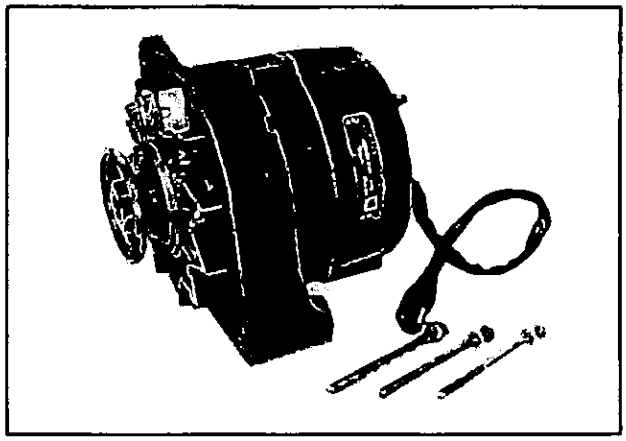

Fig. EE-34 Removal of through bolt (2)

2. Separate the diode end housing from the drive end housing assembly by means of two drivers.

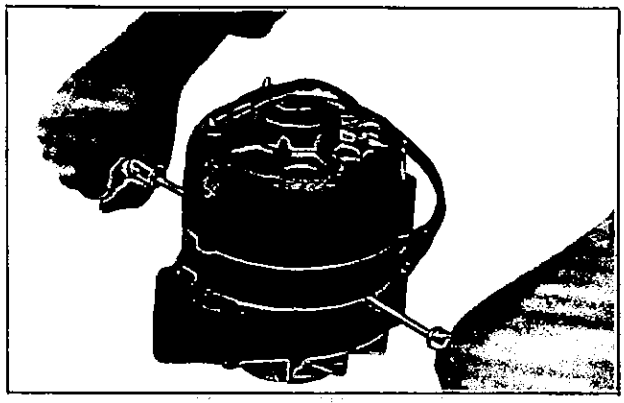

Fig. EE-35 Separating of diode end housing from drive end housing

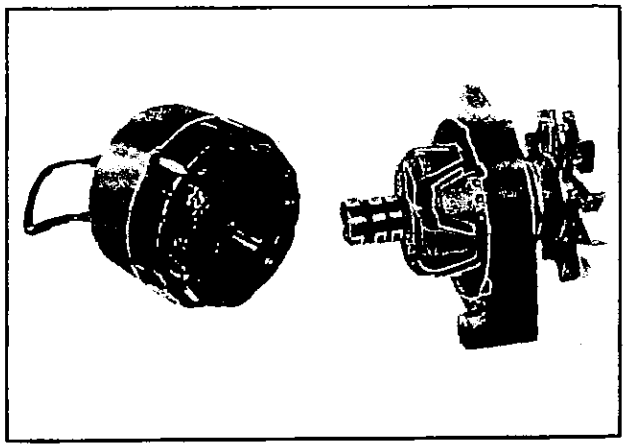

Fig. EE-36 Drive end housing and diode end housing separated

3. Vise the rotor of the drive end housing assembly carefully not to injure the rotor.
Remove the pulley nut, pulley rim, fan and the spacer.

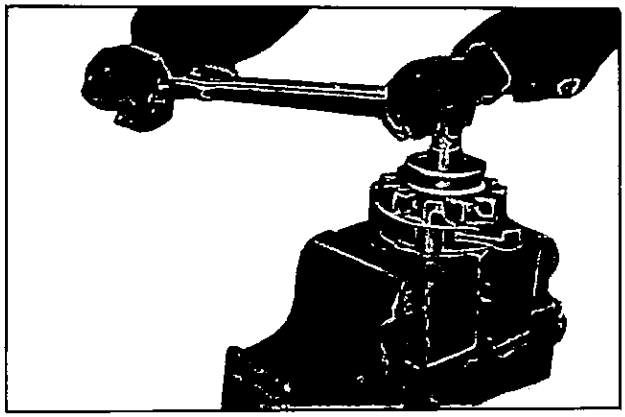

Fig. EE-37 Disassembling the rotor

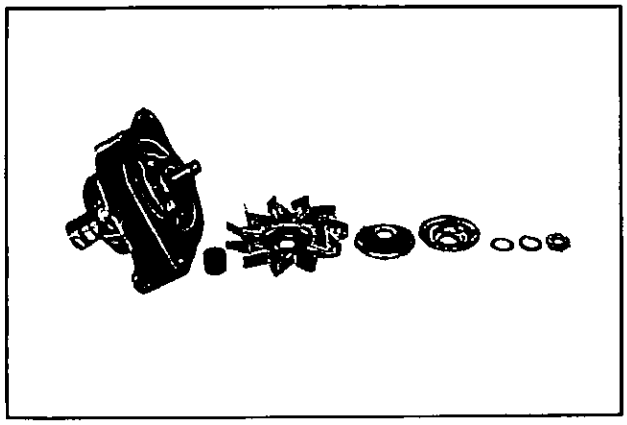

Fig. EE-38 Removal of pulley

4. Remove the rotor from the drive end housing assembly by hitting the drive end housing slightly with a mallet.

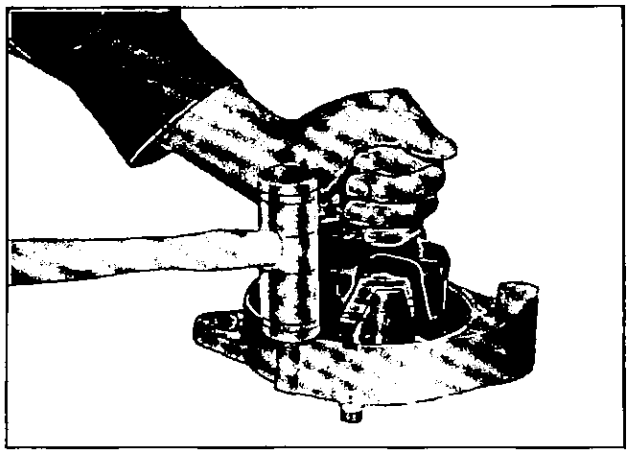

Fig. EE-39 Removal of rotor

5. Remove the bearing retainer by unscrewing three set screws and push out the bearing, using an arbor press.

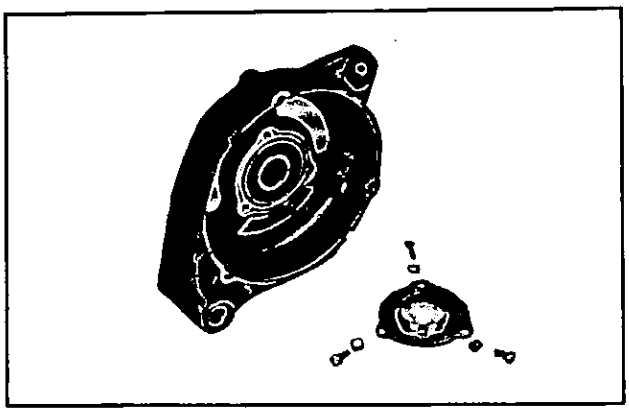

Fig. EE-40 Removal of bearing retainer

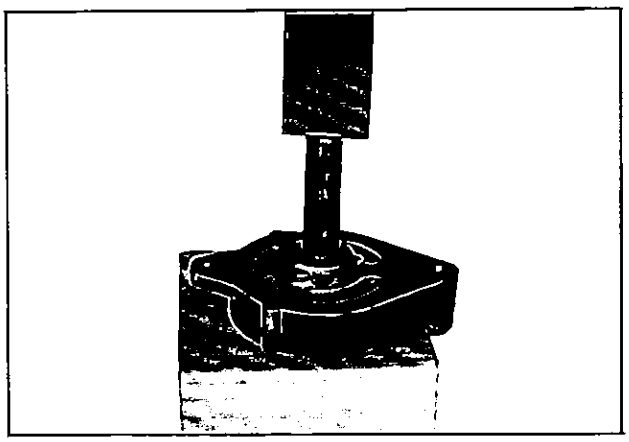

Fig. EE-41 Pulling out of bearing

6. Pull out the rear bearing from the rotor assembly, using an arbor press or bearing puller.

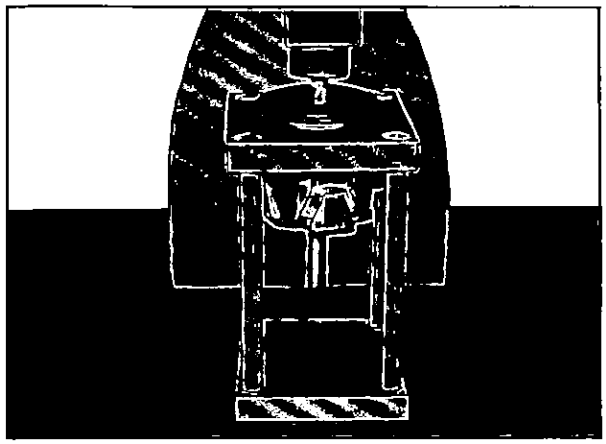

Fig. EE-42 Pulling out of rear bearing (1)

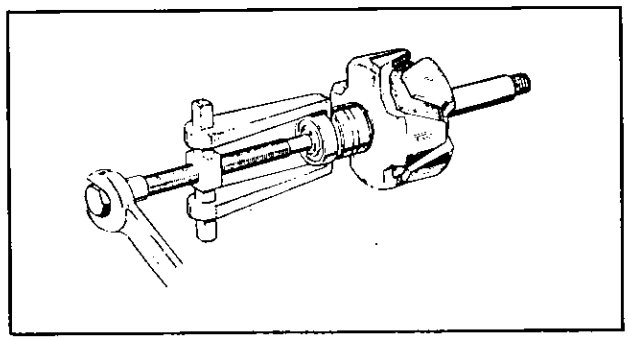

Fig. EE-43 Pulling out of rear bearing (2)

7. To separate the stator from the diode end housing assembly, disconnect the negative three diodes from three coil lead wires and each lead wire between diodes by melting solder with a soldering iron.

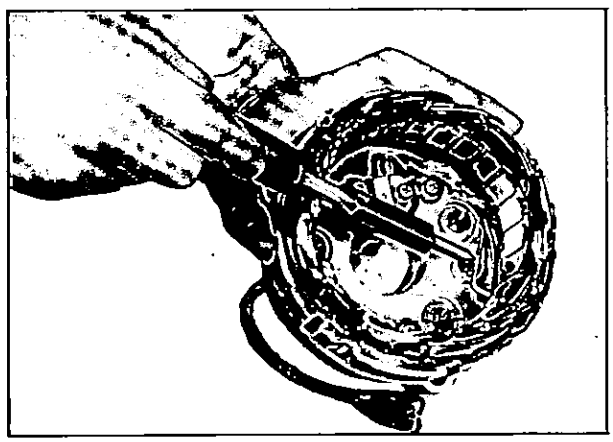

Fig. EE-44 Removal of stator

8. Remove the brush cover by unscrewing each setscrew.
Disconnect N terminal lead wire by melting solder, then the diode end and the stator can be separated.

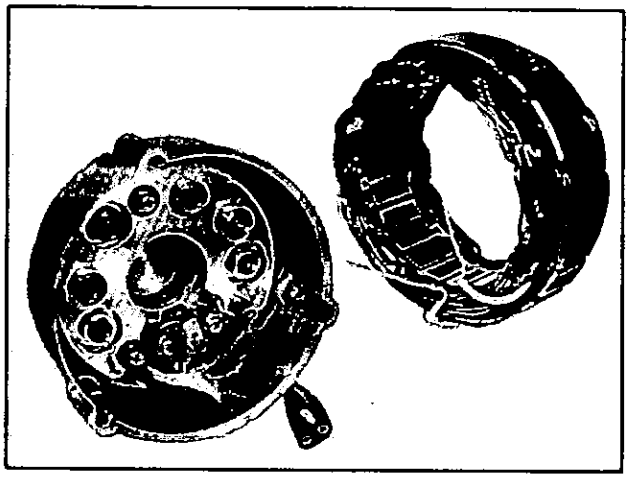

Fig. EE-45 Diode end and stator separated

Note: When the internal temperature of a diode goes up over 150°C (300°F) the diode will lose its function, so use the electric iron, 100W to 200W, for around 2 seconds at the soldered portions.

9. Remove the heat sink and the brush holder from the rear cover by unscrewing each set-screw. Be careful not to lose small parts such as screws, washers and bushings.

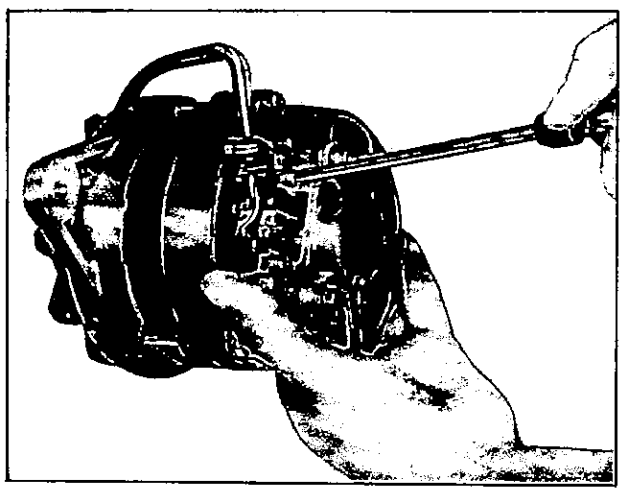

Fig. EE-46 Removal of brush holder (AS2030B1)

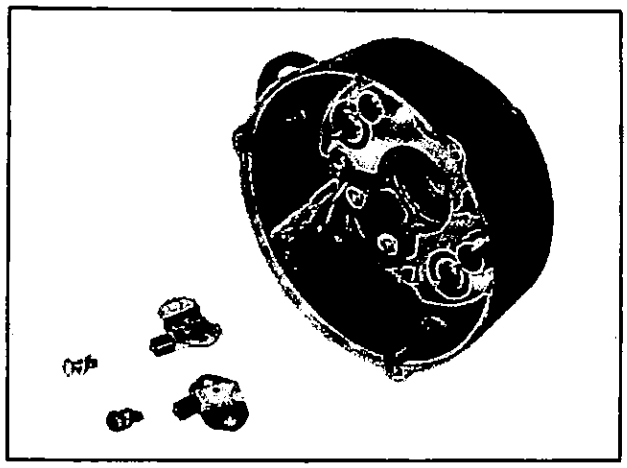

Fig. EE-47 Removal brush holder (AS2040P)

10. Disassemble the brush holder.
Dissolder lead wire F (black/white color), lead wire E (black color) and the brush holder wires (negative and positive), using a soldering iron.

Note: There are two kinds of diode, "Positive" and "Negative".
The positive diode is marked with "red figure" on the bottom of the diode and the negative diode is marked with "black figure" in the same manner as shown in Figure EE-48.

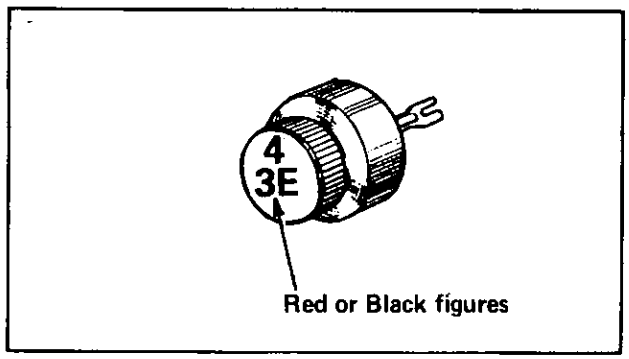

Fig. EE-48 Diode identification

DIODE REMOVAL

To remove a diode, use a suitable tool to support the heat sink, and push the diode out by using an arbor press as shown in Figure EE-49.

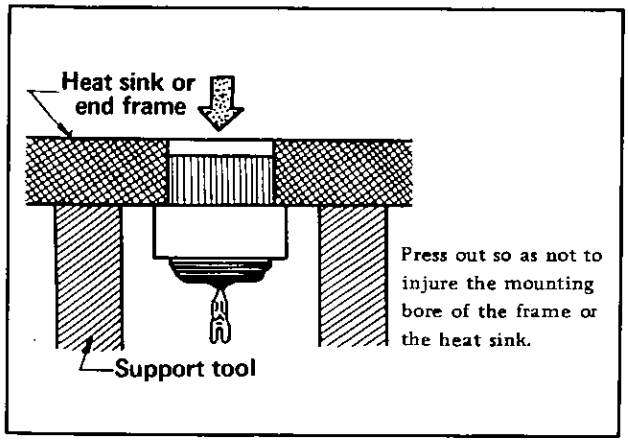

Fig. EE-49 Removal of the diode

Note: Do not strike the diode, as the shock may damage the other diodes.

DIODE INSTALLATION

Support the heat sink with a suitable tool and then press the diode into the heat sinks by using the tool Ⓐ which fits over the outer diode edge A portion.

Press down perfectly the diode into the mounting bore of C portion to the lower edge of B portion of the diode. Replaced diode should not be taken out with a force smaller than 15 kg (33 lbs.).

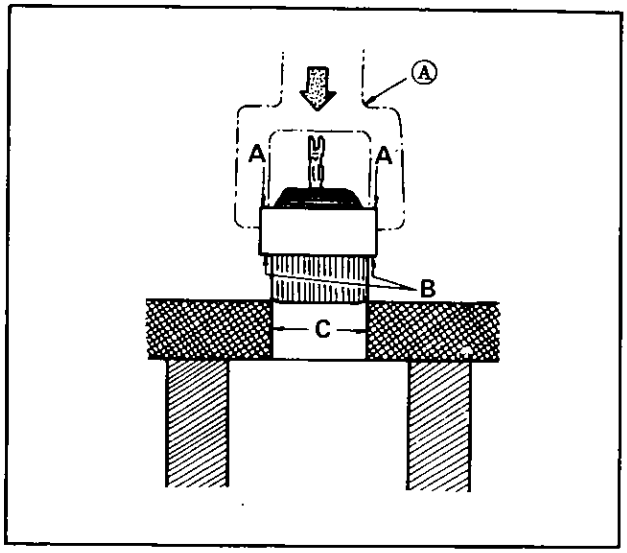

Fig. EE-50 Installation of the diode

INSPECTION AND REPAIR

Remove the alternator from the vehicle and put the tester between the lead wire F (black/white color) and the lead wire E (black color). When the resistance is approximately 5 to 6Ω, the condition is all right.

Rotor inspection

1. Conduction test of field coil

As shown in Figure EE-51, put the probes of the circuit tester between the slip rings of rotor. If there is no conduction, the field coil will be open. When the resistance is approximately 4.47 Ω at normal room temperature, the condition is all right.

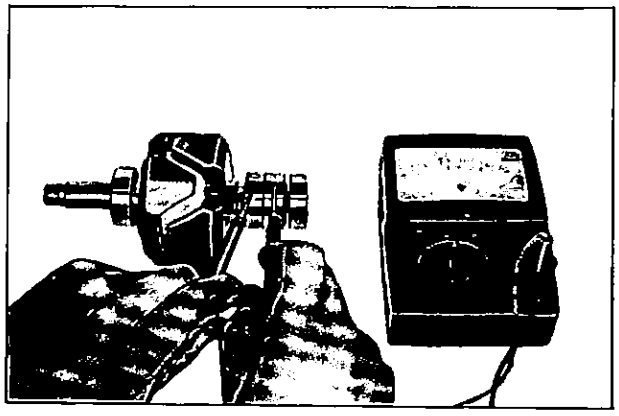

Fig. EE-51 Conduction test of field coil

2. Ground test of field coil

Check the conduction between slip ring and rotor core. If the conduction exists, replace rotor assembly because in this case, field coil or slip ring must be grounded.

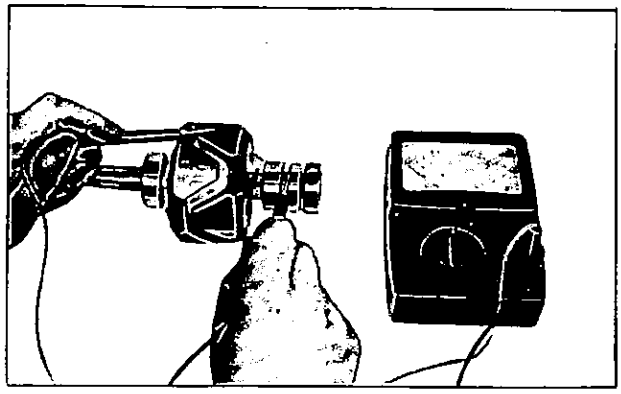

Fig. EE-52 Ground test of field coil

3. Inspection of rotor eccentricity

Check the eccentricity of rotor as shown in Figure EE-53, using a dial gauge.
Repair or replace if the eccentricity is over 0.10 mm (0.0039 in.).

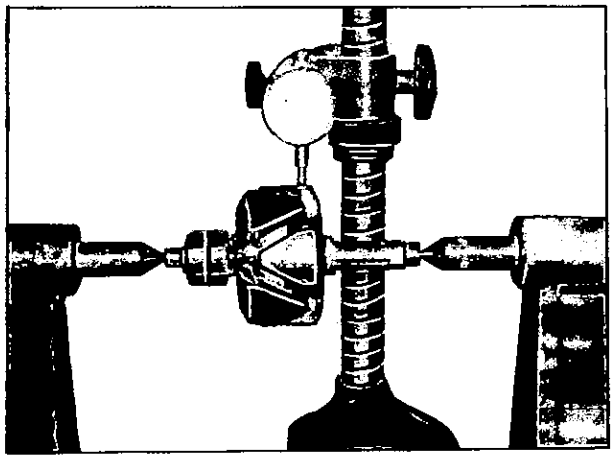

Fig. EE-53 Inspection of rotor eccentricity

Inspection of stator

1. Conduction test

If the neutral wire of stator connected to the lead wire N (white color) is conductive with each lead wire of armature coil, the condition is all right.

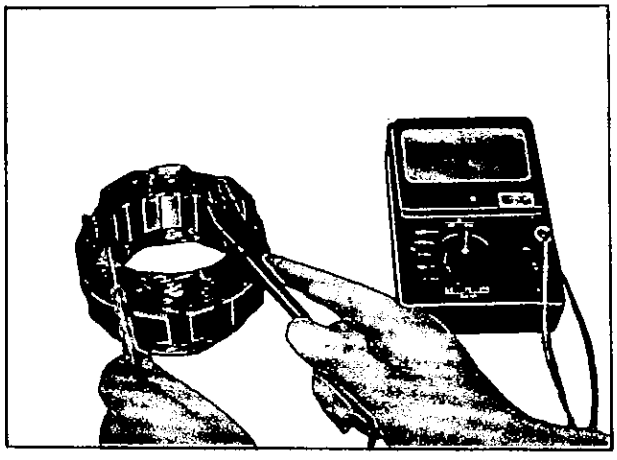

Fig. EE-54 Conduction test

2. Ground test

If each lead wire of armature coil (including neutral wire) is not conductive with stator core, the condition is all right.

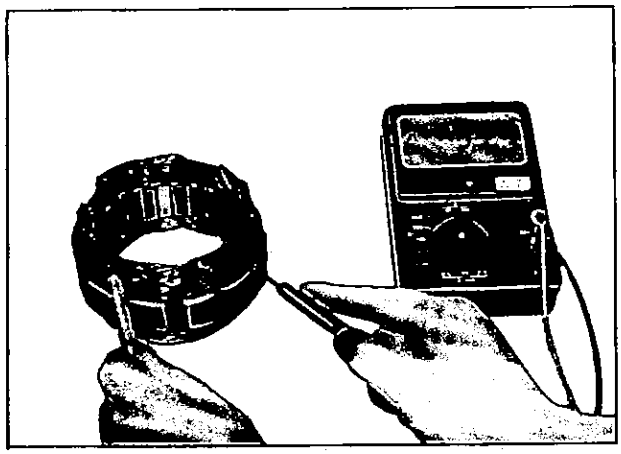

Fig. EE-55 Ground test

Inspection of diode
(Using lamp and battery)

1. Positive side diode

Connect the battery negative terminal with the terminal BAT at rear cover and the battery positive terminal with connector N terminal (white color) as shown in Figure EE-56.
Lamp in the circuit will light.

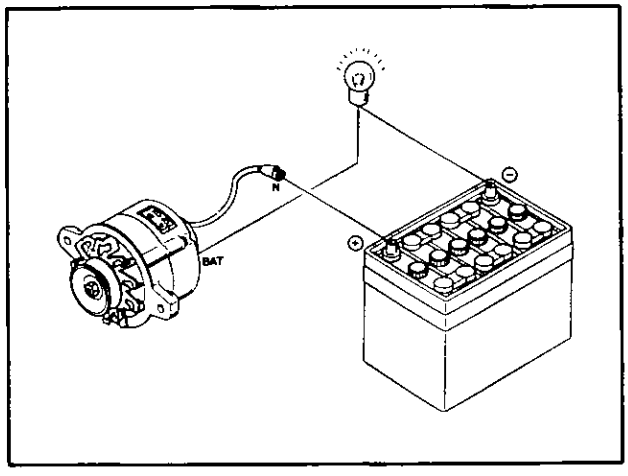

Fig. EE-56 Inspection of positive side diode

Nextly, if lamp does not light when the connection is made reversely as shown in Figure EE-57, the positive side diode is in good working condition.

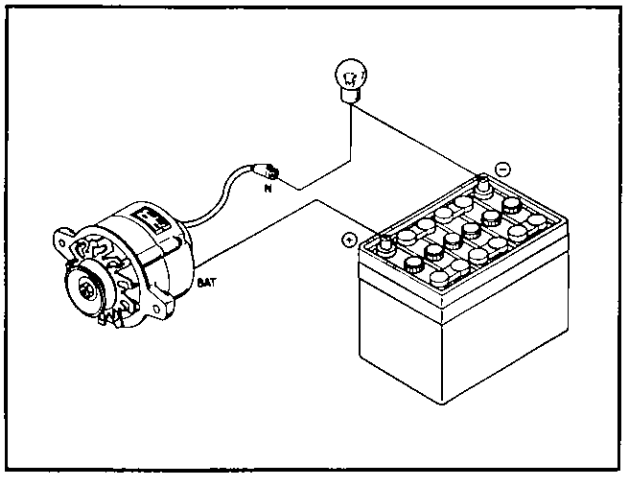

Fig. EE-57 Inspection of positive side diode

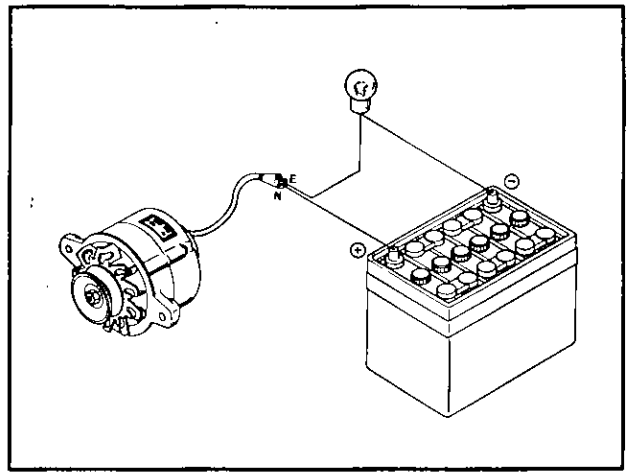

Fig. EE-59 Inspection of negative side diode

2. Negative side diode

Connect the battery negative terminal with connector N terminal (white color) and the battery positive terminal with connector E terminal (black color) as shown in Figure EE-58.
Lamp in the circuit will light.

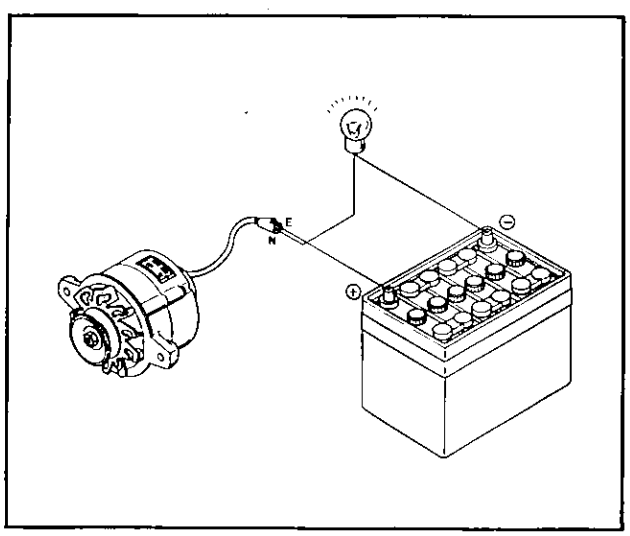

Fig. EE-58 Inspection of negative side diode

Nextly, if lamp does not light when the connection is made reversely as shown in Figure EE-59, the negative side diode is in good working condition.

Inspection of diode with tester

There are two kinds of diodes as shown in Figure EE-60. Each diode can be descriminated its polarity by the color of the printed figures on each diode as follows.

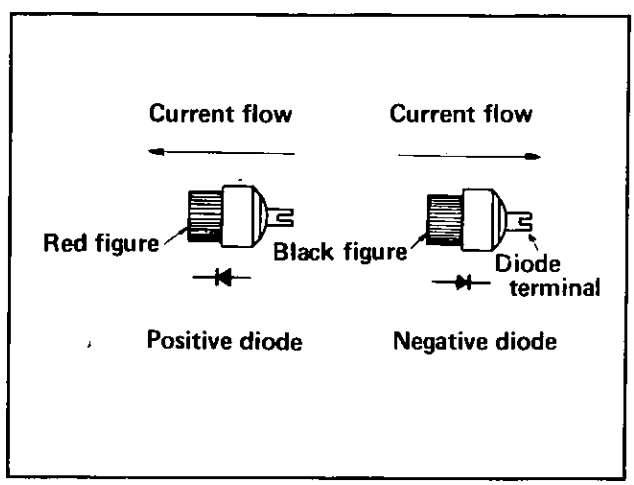

Fig. EE-60 Diode

Check diode resistance, using a tester, in a current flow direction and a reverse direction as shown in Figure EE-61.

When one side shows low resistance and the other shows high resistance, the diode condition is all right.

If both sides are low, there will be a short circuit and if both sides are infinite, there will be a open circuit. In both cases, replace diode.

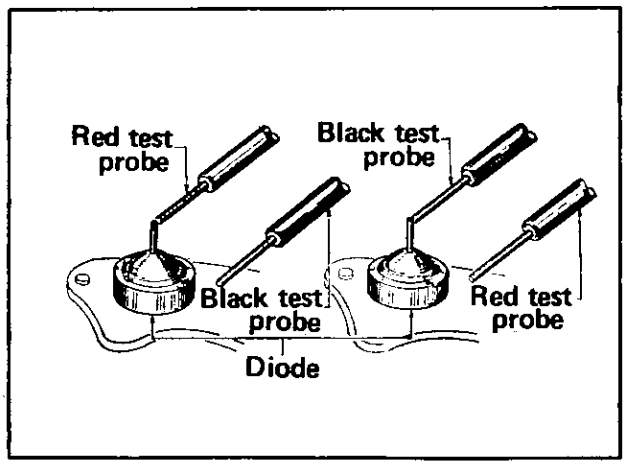

Fig. EE-61 Diode test

Inspection of brush

Check the movement of brush and if the movement is unsmooth, check brush holder and clean it.

The standard length of brush is 13 mm (0.512 in.). If brush wore off smaller than 7 mm (0.276 in.), replace the brush with new one.

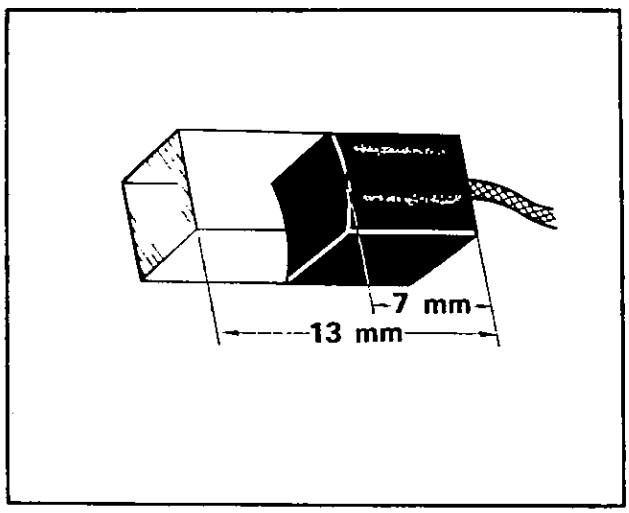

Fig. EE-62 Brush wear limit

	AS2030B1	AS2040P
Brush length mm (in.)	13 (0.512)	20 (0.787)
Wear limit mm (in.)	7 (0.276)	14 (0.552)

Spring pressure test

Place a suitable block on a platform scale and press down brush holder with brush and spring on the block until brush sinks in the holder to 1 mm (0.0394 in.) height from the holder. The reading subtracted the block weight shows the spring pressure. The spring pressure should be 0.35 kg (0.77 lbs.). If the pressure is small than 0.2 kg (0.44 lbs.), replace it.

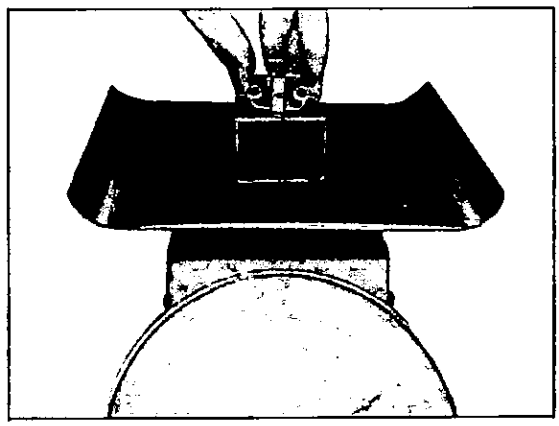

Fig. EE-63 Spring pressure test

Inspection of output

The procedure of output inspection is as follows.

1. Remove the alternator from the vehicle and connect wiring as shown in Figure EE-64.

2. Turn the switch K1 on and excite the rotor.

3. Drive the alternature with motor and increase its speed gradually until the ammeter indicates "zero".

4. Turn off the switch K1 and further increase the speed of the alternator until the voltmeter indicates 14 volts.

5. The specified revolution when the voltmeter indicates 14 volts is approximately 1,100 rpm.

6. Make the load resistance the maximum and turn the switch K2 on.

7. Raise the load current by decreasing the load resistance gradually and increase the alternator

speed. Then, the alternator output voltage should be kept to 14 volts.

Note: Increasing the alternator speed would cause to increase the output.

8. Read the output current when the revolution of alternator is 5,000 rpm.

9. The specified current should be as follows.

AS2030B1 ..... more than 30 Ampere
AS2040P ..... more than 40 Ampere

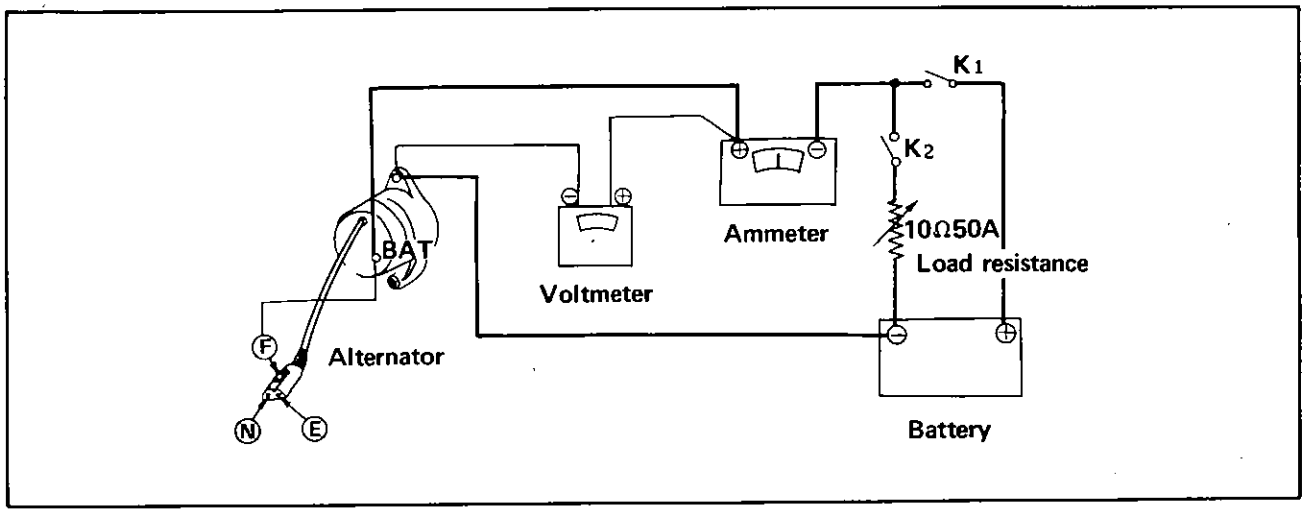

Fig. EE-64 Circuit diagram for output inspection

Note: Use the battery charged in full up to the normal capacity.

ASSEMBLY

In case of AS2030B1

Assembly is a reversal of disassembly procedure. However, the brush holder and brush cover should be installed at the last procedure.

In case of AS2040P

1. Install the brush holder to the diode end housing by two securing screws.

2. Insert two brushes to the brush holder and push it against spring tension.
Secure the brushes by an iron wire as shown in Figure EE-65.

3. Install the stator to the diode end housing.

4. Join together both end housings by three through bolts.

5. After the all parts have been assembled, remove an iron wire, then brushes and slip rings come in contact.

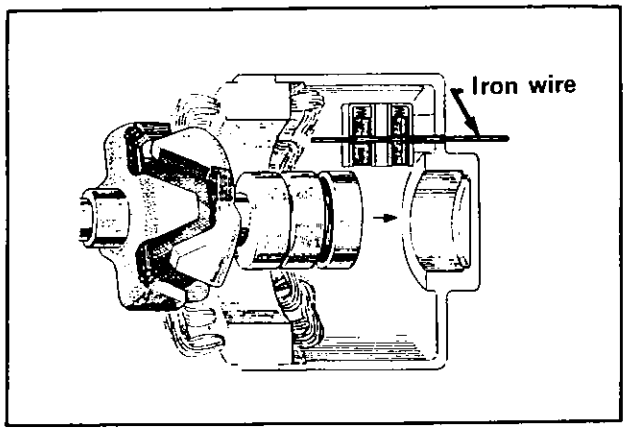

Fig. EE-65 Installation of brush holder (AS2040P)

REGULATOR

CONTENTS

REMOVAL EE-26
INSTALLATION EE-26
ADJUSTMENT EE-26
Check of regulated voltage EE-27
Adjustment of gap EE-27
Adjustment of voltage EE-29
TROUBLE DIAGNOSES AND CORRECTIONS EE-29

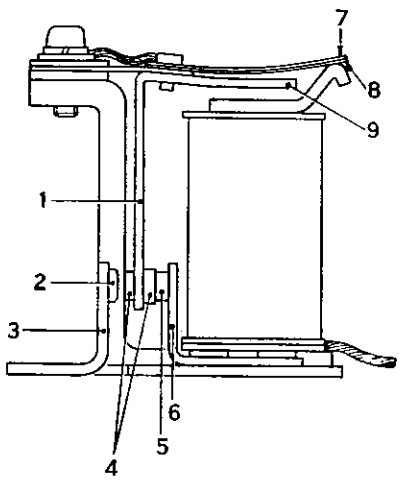

1.	Movable contact support	5.	Primary side contact
2.	Secondary side contact	6.	Primary side contact support
3.	Secondary side contact support	7.	Spring
4.	Movable contact	8.	Bi-metal
		9.	Armature

Fig. EE-66 Regulator

The voltage regulator RQA2220B is temperature-compensated so that the charging voltage copes with the climatic variations and two units are housed in the regulator box: a voltage regulator relay and a pilot lamp relay. The effect of temperature fluctuation on their relay setting is minimized by the use of bi-metal spring.

REMOVAL

To remove the voltage regulator, disconnect the 6-way multiple connector and remove the screw securing the regulator to the longitudinal bulkhead of the engine room.

INSTALLATION

Installation is a reversal of removal procedure.

ADJUSTMENT

In the temperature-compensated regulator, it is necessitated to measure the temperature of the regulator cover as the regulating voltage is varied according to the surrounding temperature.

In this case, use the thermometer (90196-0001P) or cylindrical thermometer with putty as shown in Figure EE-67.

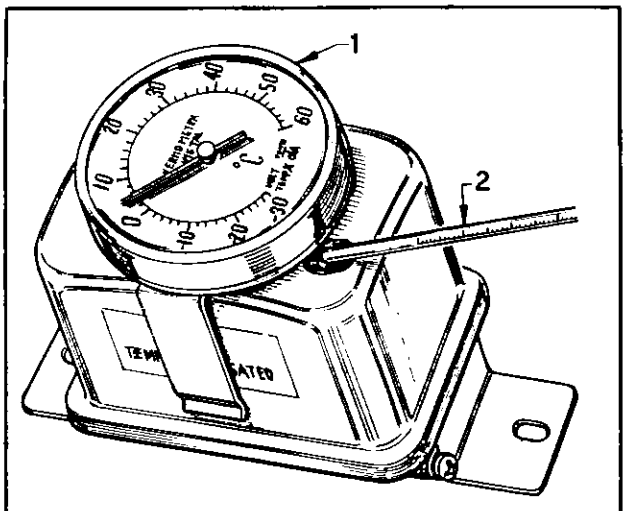

1.	Thermometer
2.	Cylindrical thermometer

Fig. EE-67 Measuring of regulator cover temperature

Check of regulated voltage

1. Connect the battery almost charged in full as shown in Figure EE-68.

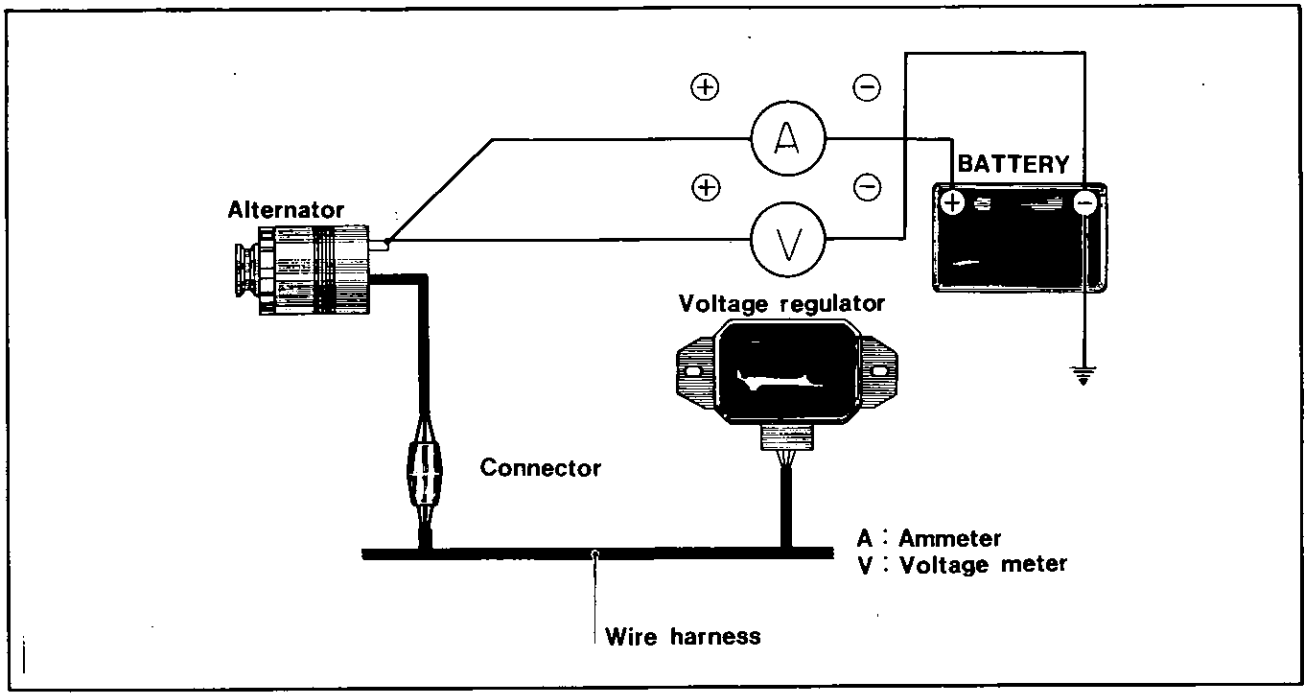

Fig. EE-68 Meter and instrument connection

2. Measure the temperature of regulator cover as shown in Figure EE-67.

3. Raise the alternator revolution to 4,000 to 5,000 rpm (engine revolution 1,960 to 2,450 rpm).

4. When the charging current is less than 5 ampere and the voltage of this time is within the limit of Figure EE-69, it is all right.

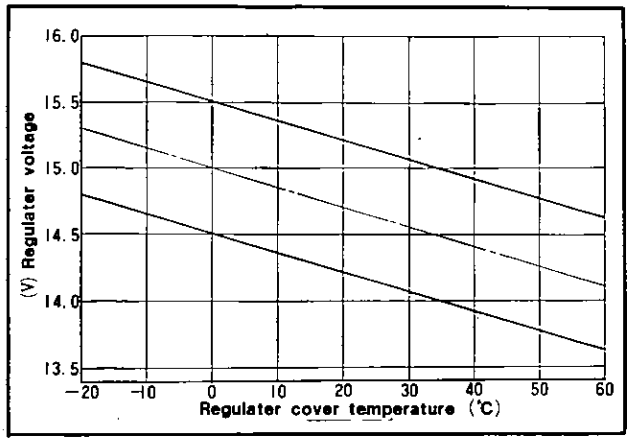

Fig. EE-69

Adjustment of gap

The gap adjust values of the constant voltage relay and the pilot lamp relay must be as follows.

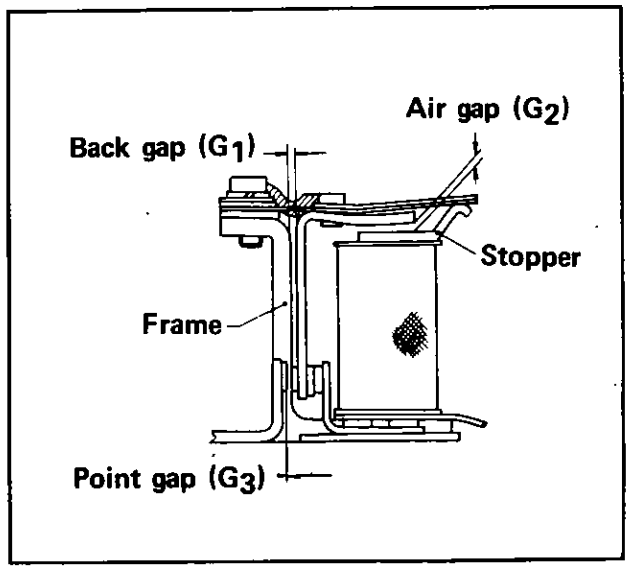

Fig. EE-70 RQA2220B

RQA2220B		
Constant voltage relay mm (in.)	G1	0.8 ~ 1.1 (0.0315 ~ 0.0433)
	G2	0.8 ~ 1.2 (0.0315 ~ 0.0472)
	G3	0.3 ~ 0.4 (0.0118 ~ 0.0157)
Pilot lamp relay mm (in.)	g1	0.75 ~ 1.1 (0.0295 ~ 0.0433)
	g2	0.9 ~ 1.2 (0.0354 ~ 0.0472)
	g3	0.75 ~ 1.1 (0.0295 ~ 0.0433)

The voltage regulator and the pilot lamp relay are the same type. Accordingly, the adjusting method is also the same.

Adjust these gaps in order of G1 (g1), G2 (g2) and G3 (g3), if these are out of specifications.

* Back gap (G1 or g1)

Loose the armature hinge screw and adjust the position by sliding the armature.

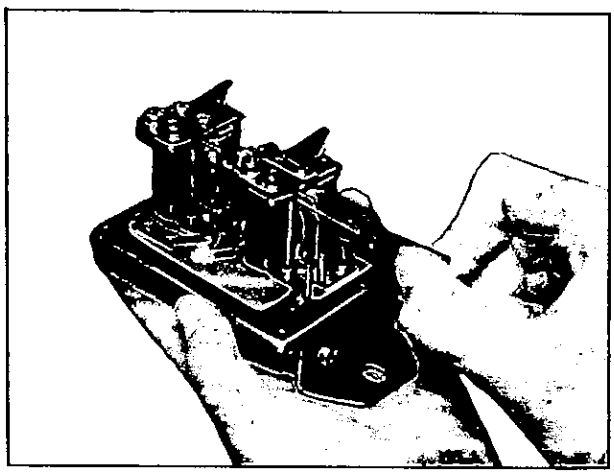

Fig. EE-71 Checking G1 (g1)

* Top air gap (G2 or g2)

Adjust the gap by bending the movable contact supports as shown in Figures EE-72 and EE-73.

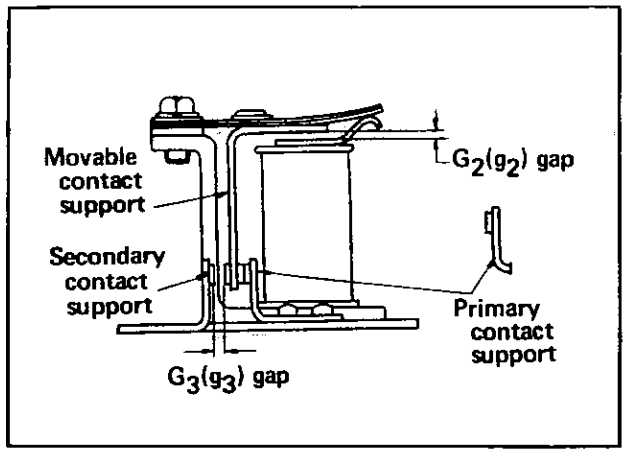

Fig. EE-72 Adjusting gap

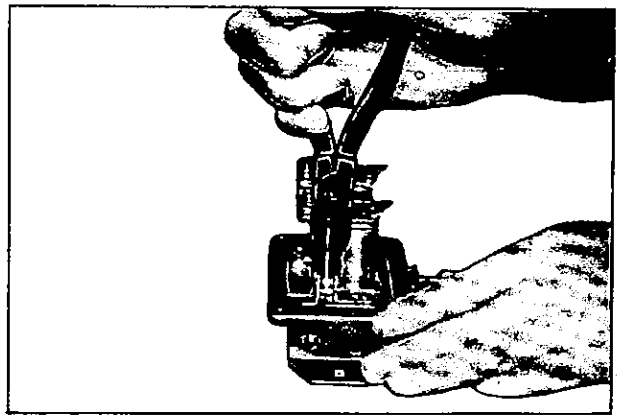

Fig. EE-73 Adjusting G2 (g2) gap

* Point gap (G3 or g3)

Adjust the gap by bending the secondary contact support as shown in Figures EE-72 and EE-74.

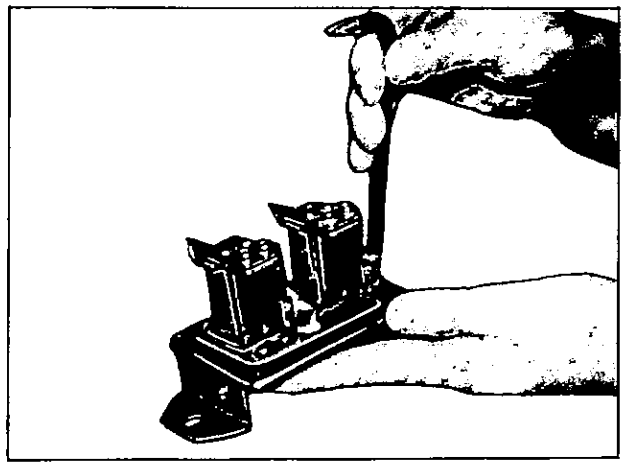

Fig. EE-74 Adjusting G3 (g3) gap

Adjustment of voltage

Adjust the voltage by bending the stopper up and down. Bend upward to heighten adjust value and downward to lower adjust value.

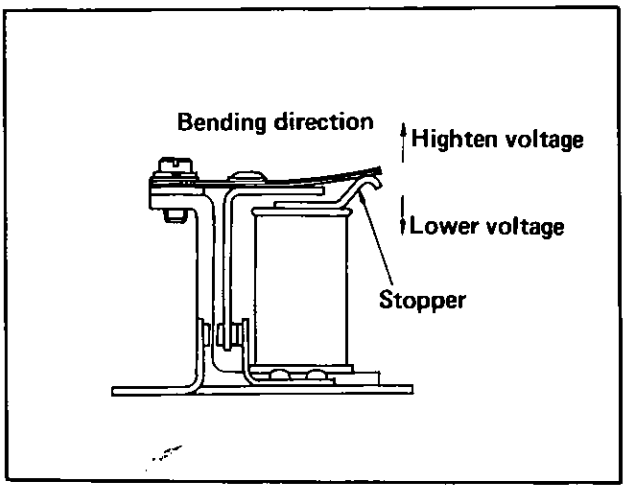

Fig. EE-75 Adjusting the voltage

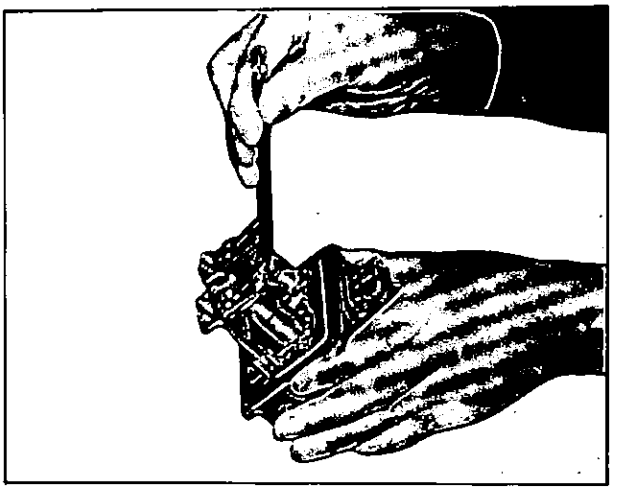

Fig. EE-76 Adjusting the voltage

TROUBLE DIAGNOSES AND CORRECTIONS

Troubles	Causes	Remedies
No output	Sticking brushes.	Free; replace brush and brush spring.
	Dirty brushes and slip rings.	Clean the brushes and slip rings.
	Loose connections or broken leads.	Tighten or solder connection. Replace leads.
	Open stator winding.	Repair or replace the stator.
	Open rotor winding.	Replace the rotor.
	Open diodes.	Replace the diodes.
	Shorted rotor.	Replace the rotor.
	Shorted stator.	Repair or replace the stator.
	Grounded "BAT" terminal.	Replace the insulator.
	Broken fan belt.	Replace the belt.
Excessive output	Broken neutral point wire (color of wire is white).	Replace the wire.
	Defective voltage regulator.	Check the regulator operation.
	Poor grounding of the alternator and voltage regulator "E" terminal.	Tighten the terminal connection.

	Broken ground wire (color of wire is black).	Replace the wire.
Low output	Loose or worn fan belt.	Tighten or replace the belt.
	Sticking brushes.	Free; replace brushes and spring if necessary.
	Low brush spring tension.	Replace the brush spring.
	Defective voltage regulator.	Check the regulator operation.
	Dirty slip rings.	Clean the slip ring.
	Partial short, ground, or open in stator winding.	Replace the stator.
	Partial short or ground of rotor winding.	Replace the rotor.
	Open diode or defective diode.	Replace the diode.
Noisy alternator	Loose mounting.	Tighten mounting bolts.
	Loose drive pulley.	Tighten pulley.
	Defective ball bearings.	Replace the bearing.
	Improperly seated brushes.	Seat brushes properly.

IGNITION CIRCUIT

The ignition circuit includes the distributor, ignition coil, ignition switch, spark plugs, high tension cable and the battery.

DISTRIBUTOR

CONTENTS

SPECIFICATIONS EE-31
CONSTRUCTION AND OPERATION EE-31
CHECKING AND ADJUSTMENT..... EE-34
Cap and rotor head EE-34
Point EE-34
Condenser EE-34
Vacuum advance mechanical part and switch on-off part EE-35
Centrifugal advance mechanical part EE-35
DISASSEMBLY AND ASSEMBLY EE-36
Disassembly EE-36
Assembly EE-38
SERVICE DATA EE-39

Distributor model	Applied engine
D416-57	G18
D423-53	G18 (with emission control system)

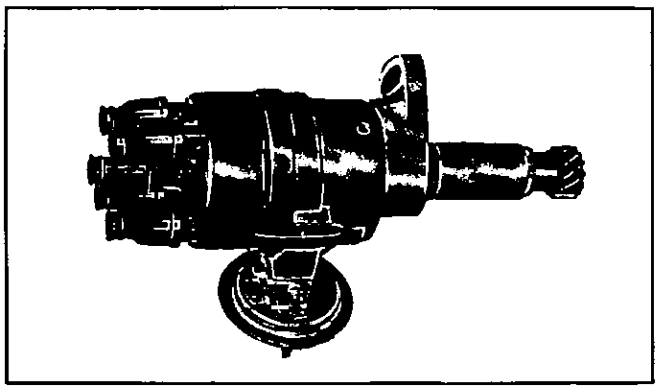

Fig. EE-77 D416-57

SPECIFICATIONS

			D416-57	D423-53
Make			HITACHI	HITACHI
Applied engine			G18	G18 (with emission control system)
Firing order			1-3-4-2	1-3-4-2
Rotating direction			Counter-clockwise	Counter-clockwise
Ignition timing			8°/600 (B. T. D. C.)	5°/600 (A. T. D. C.)
Dwell angle			49° ~ 55°	49° ~ 55°
Condenser capacity (μF)			0.20 ~ 0.24	0.20 ~ 0.24
Advance characteristic	Centrifugal	Start (rpm)	550	475
		Maximum (degree/rpm)	(11.5°/1,400) 16.5/2,800	(11.5°/1,000) 23.5°/2,600
	Vacuum	Start (-mmHg)	80	80
		Maximum (degree/rpm)	6.5°/200	3°/120 8°/400
Weight		kg (lbs.)	1.2 (2.646)	1.2 (2.646)

CONSTRUCTION AND OPERATION

Figure EE-78 shows ignition diagram of gasoline engine. Functionally, the distributor consists of high tension voltage part, switch off part, centrifugal advancing angle part, vacuum advance mechanical part and driving part. Figure EE-79 and EE-80 show its structure.

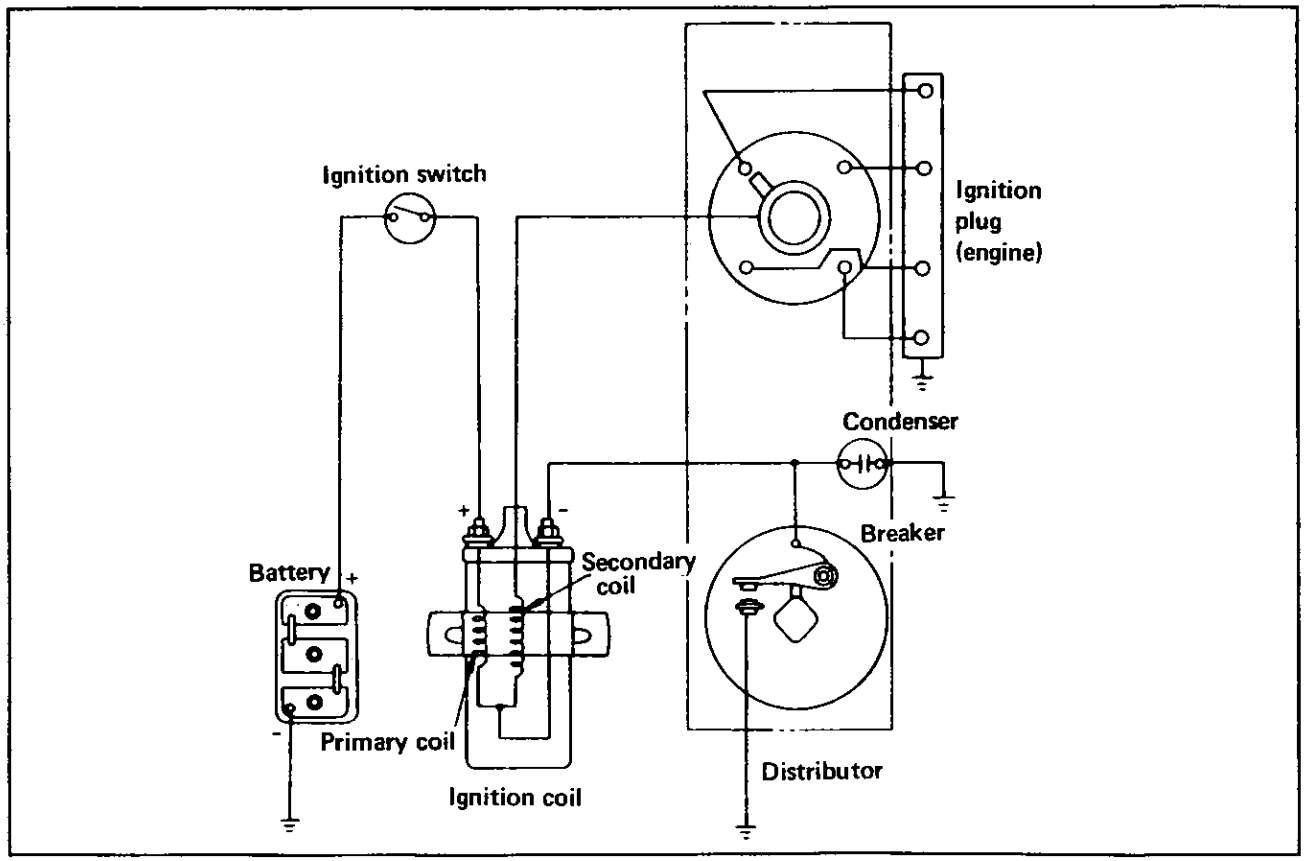

Fig. EE-78 Ignition diagram (D416-57, D423-53)

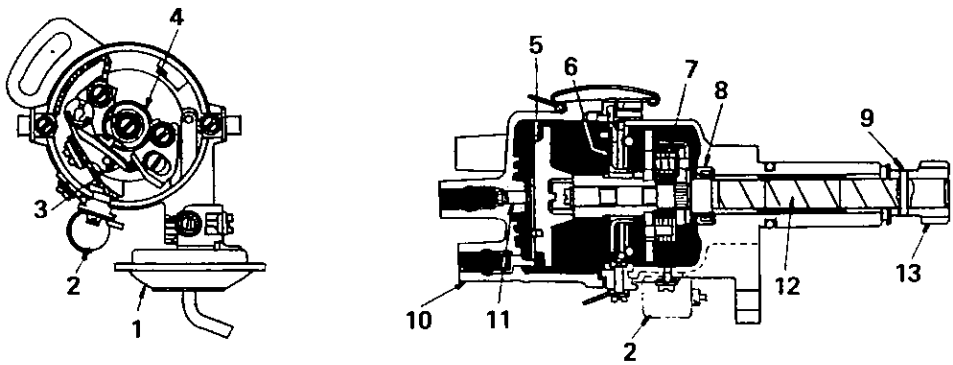

1.	Vacuum controller	5.	Rotor head	9.	Knock pin
2.	Condener	6.	Breaker head	10.	Cap
3.	Contact arm	7.	Governer weight	11.	Carbon point
4.	Cam	8.	Oil seal	12.	Shaft
				13.	Pinion

Fig. EE-79 Structure (D416-57)

≪Distributor assembly≫

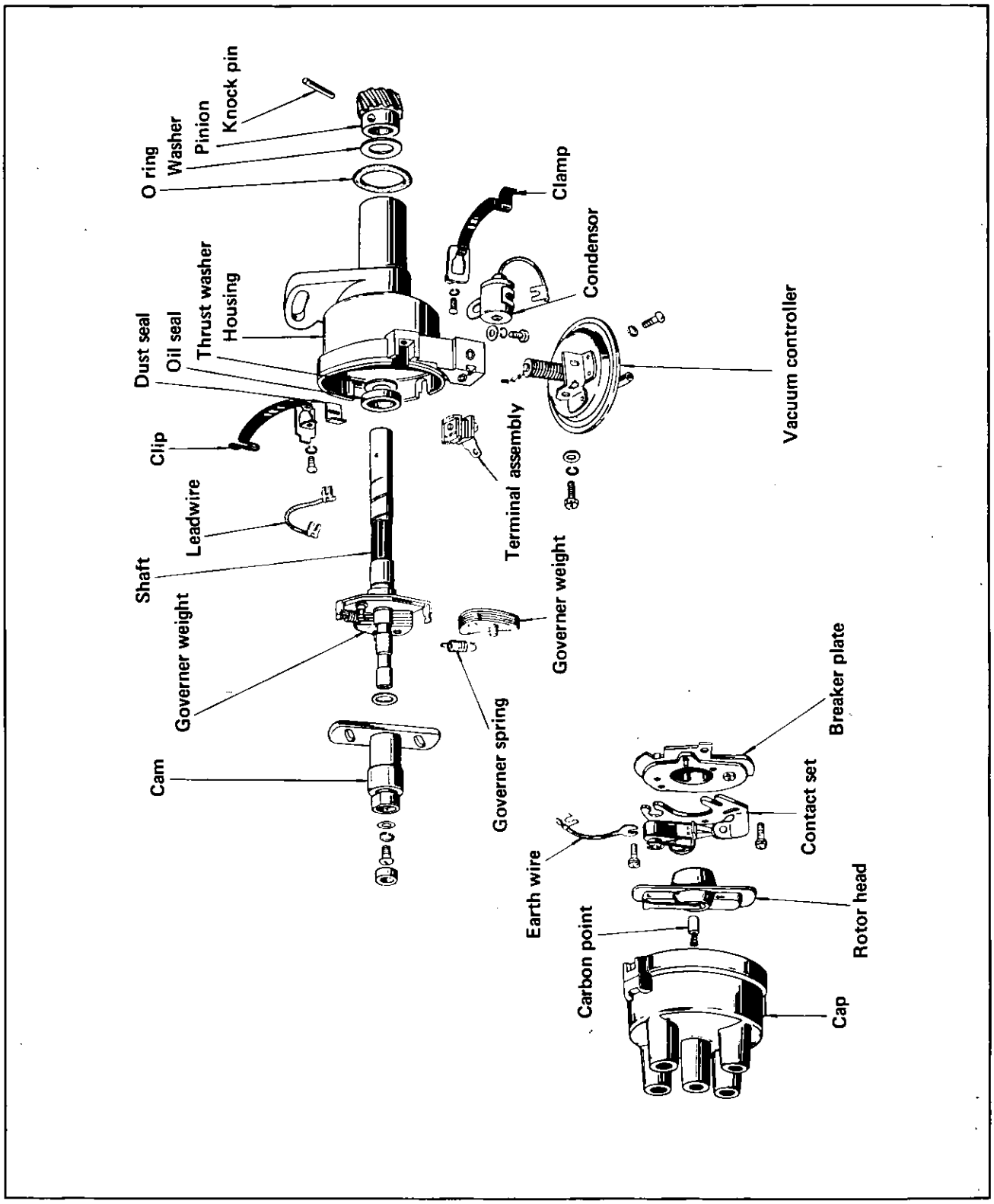

Fig. EE-80 D416-57, D423-53

CHECKING AND ADJUSTMENT

Cap and rotor head

Cap and rotor head must always be kept clean to maintain good insulation durability since high tension voltage from ignition coil is imposed on them. Sometimes, inside of cap and rotor head is covered by only fine carbon powder and dust, cleaning is required by gasoline once in a month. Whenever crack or trace of leakage is found on the cap, it must be replaced with a new one.

Point

Standard size of point gap is 0.45 to 0.55 mm (0.0177 to 0.0217 in.). In case size is off the standard, adjustment is required by loosening point screws. Gap gauge is required for adjustment. However, without gap gauge it can be adjusted by holding down the contact arm of which the stopper is 0.5 mm (0.0197 in.) thick. As for those with tungsten point, point gap must be checked at every 4,000 km (2,500 miles) run. When surface of the point is not smooth, fine sand paper No. 500 or 600 or oily whetstone must be applied for smoothing. At this time, grease must be supplied to both arm pivot receiver and surface of cam. In case wearing of point is remarkable, it must be replaced with a new one. In this case, contact arm and contact point are also to be replaced with. Details for replacement is as undermentioned.

First loosen by 1 to 1.5 turns of screw at contact arm and primary lead wire connection part to pull out primary lead terminal. In this case, however, notice not to loosen the screw excessively. Refer to Figure EE-82.

As shown in Figure EE-82, take off the stopper from stem bar and hold the contact point by fingers and pull out toward you elevating it a little. The both contact point and contact arm can be disconnected together.

When new contact set is connected, do just in opposite order. Apply slightly grease on both arm pivot receiver and surface of cam.

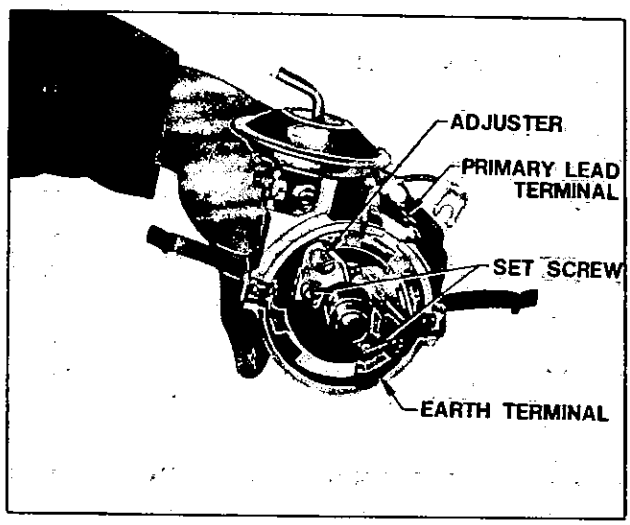

Fig. EE-81 Breaker

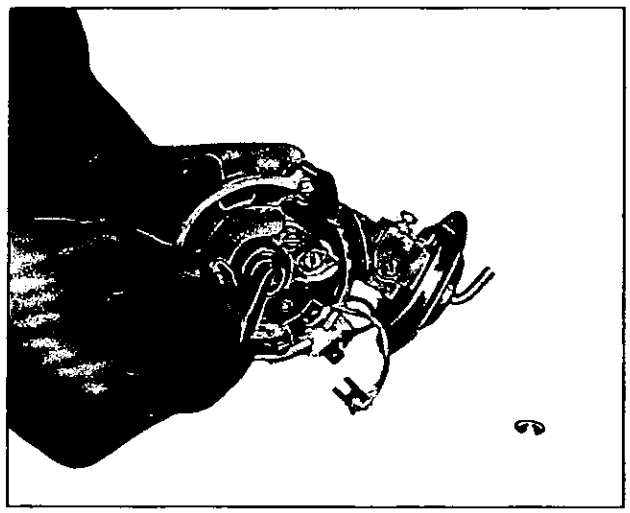

Fig. EE-82 Disassembling the contact arm and contact point

Condenser

Performance of condenser depends on the setting and insulating condition. Thus, frequent checking is required to clean the outlet of lead wire and to prevent set screw from loosening. Checking of condenser is made by capacity meter. Without capacity meter, it can be checked by tester by adjusting its range to measure large resistance value. When condenser is normal, tester indicator swings largely instantly and gradually moves back to the infinite. In case the indicator never stays or it points Zero in resistance, the transformer is out of order and must be replaced with.

Vacuum advance mechanical part and switch on-off part

≪Vacuum advance characteristic≫

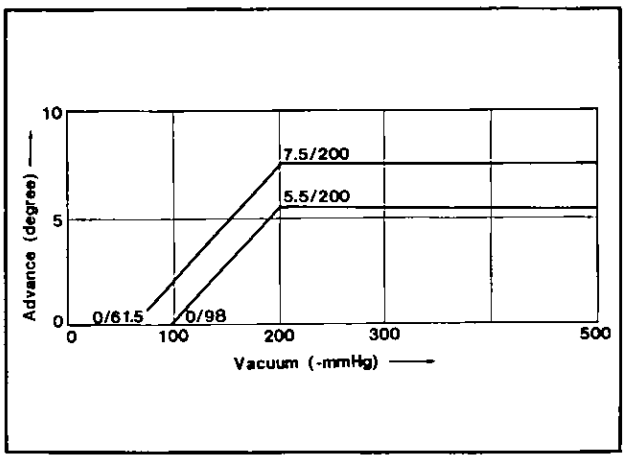

Fig. EE-83 D416-57

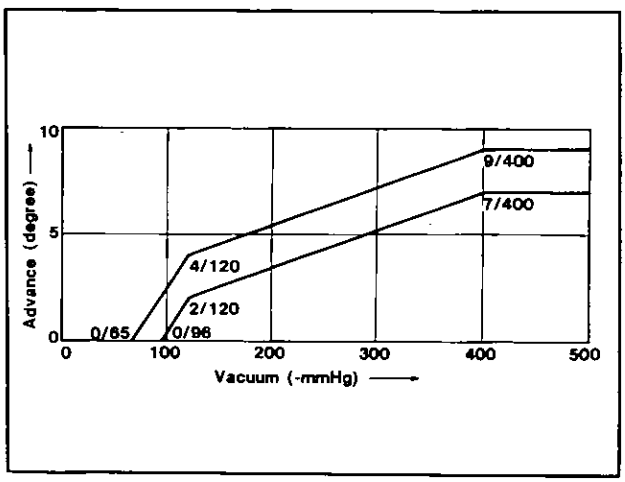

Fig. EE-84 D423-53

Check whether vacuum advance mechanism operates or not, by operation indicator attached to vacuum advance mechanism.

Followings are the causes considered for non-operation.

1. Leakage of air due to incomplete fastening of vacuum inlet.

2. Leakage due to defective diaphragm.

3. Fixed side and moving side of breaker plate is sticked.
   Solution for 1. is to make complete fastening and 2. is to replace it with a new one.
   Solution for 3. is as follows:

(1) Moving side of breaker plate is supported by three steel balls for each up and down side. Do these balls work smoothly?

(2) Moving side of breaker plate is to rotate with pivot receiver of fixed side.
Does this pivot receiver move?
In case of assembly, be sure to put in 3 steel balls for each up and down side and to apply grease.

Centrifugal advance mechanical part

When cause of engine trouble is traced to centrifugal advance mechanical part, use distributor tester to check its characteristic. When nothing is wrong with its characteristic, conceivable causes are defectiveness or abnormal wearing-out of driving part or others. So do not disassemble it. In case of improper characteristic, take off switch on-off part and check closely cam assembly, governor weight, shaft and governor spring, etc.

In case centrifugal advance mechanical part is reassembled, be sure to check advance characteristic by distributor tester.

≪Centrifugal advance characteristic≫

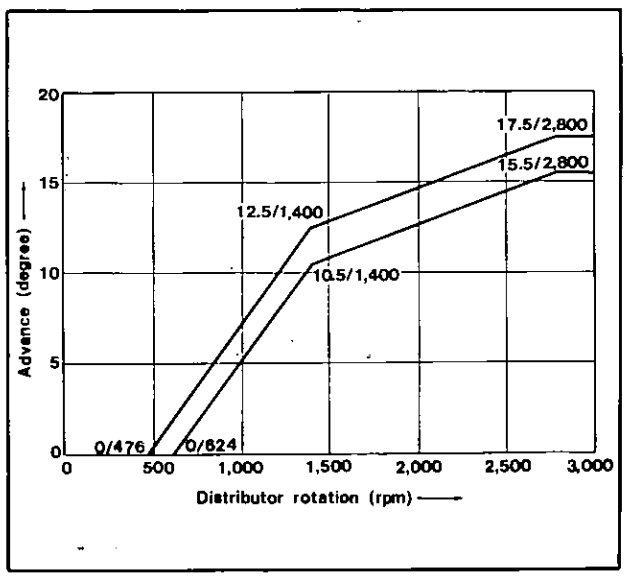

Fig. EE-85 D416-57

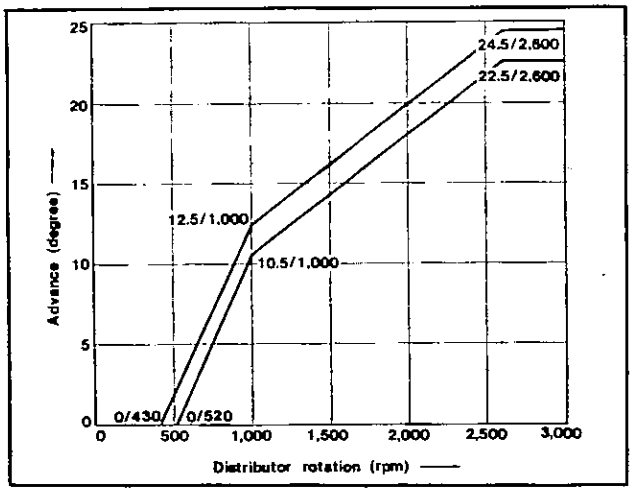

Fig. EE-86 D423-53

DISASSEMBLY AND ASSEMBLY

Disassembly

When distributor is disconnected from engine, position of distributor and rotor head for housing must be well remembered or marked.

If distributor is set to wrong place, no operation become possible. Disassembly is to be made in the following order.

1. Take off cap and disconnect rotor head.

2. Take off vacuum controller.

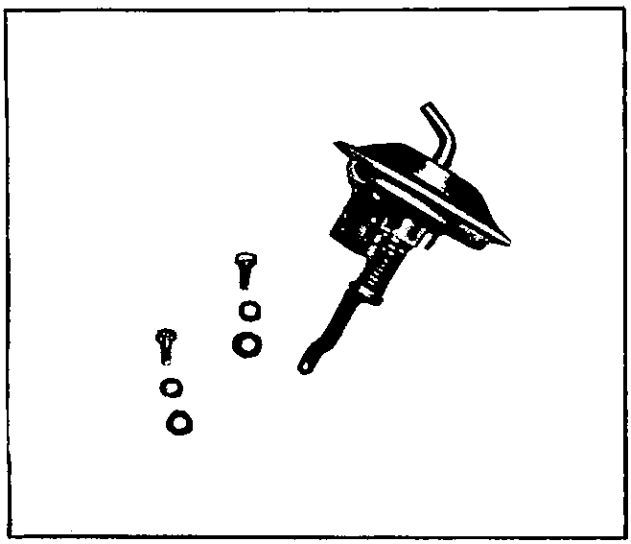

Fig. EE-87 Disassembly of vacuum controller

3. Take off contact breaker.
Refer to page EE-34 when contact set is to be disconnected.

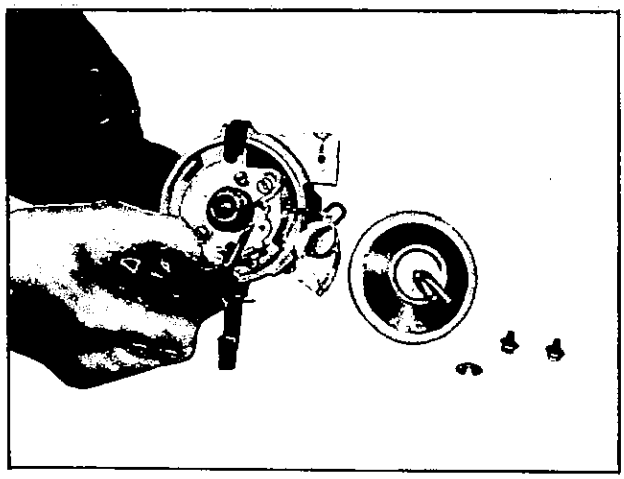

Fig. EE-88 Removal of contact set

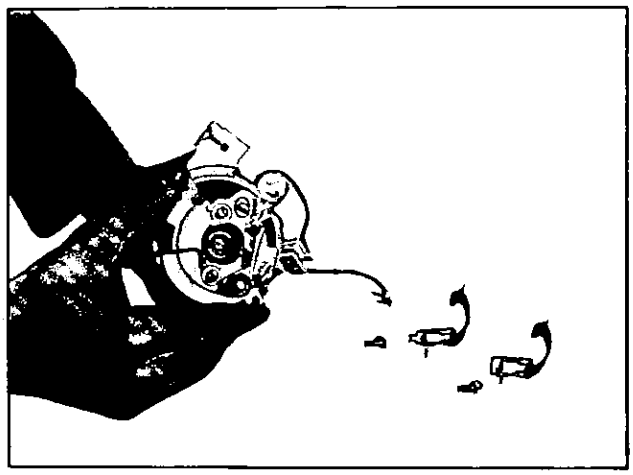

Fig. EE-89 Removal of contact breaker

4. When contact breaker is disassembled, take off clip to disconnect breaker plate (fixed) putting down moving breaker plate.
Be careful not to lose steel balls between breaker spring and breaker plate as well as those between breaker plates.

5. Pull knock pin and disconnect gear to pull out whole rotation part. However before pulling out, put counter mark on gear and shaft or remember the relation between coupling direction and setting groove of cam rotor head.

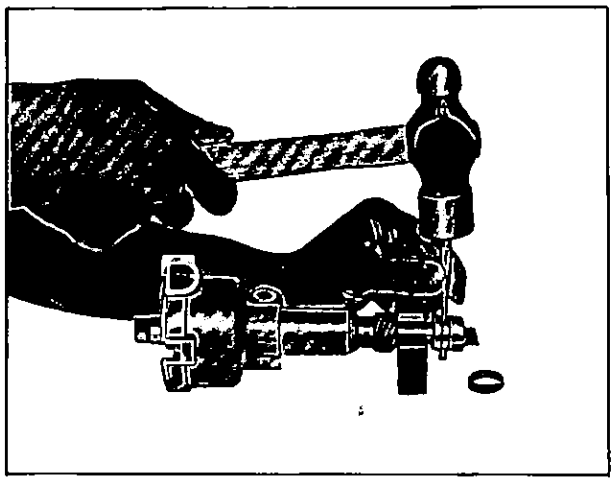

Fig. EE-90 Removal of knock pin

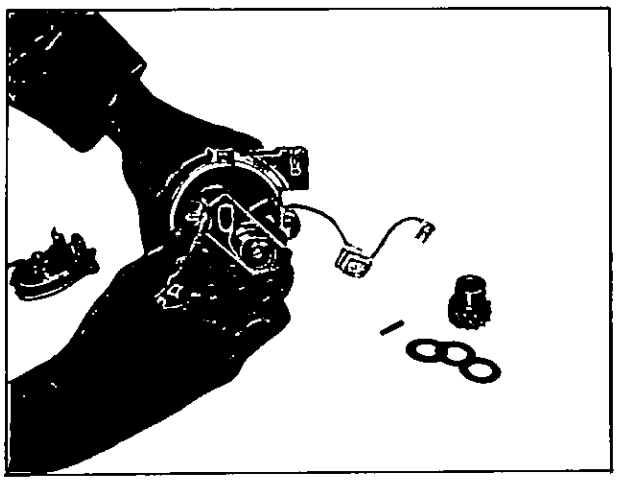

Fig. EE-91 Removal of rotation part

6. When cam is disconnected, take off set screw first since shaft head is fastened by screw to hold cam down. In this case also, put counter mark on cam and shaft or remember the relation with ignition timing.

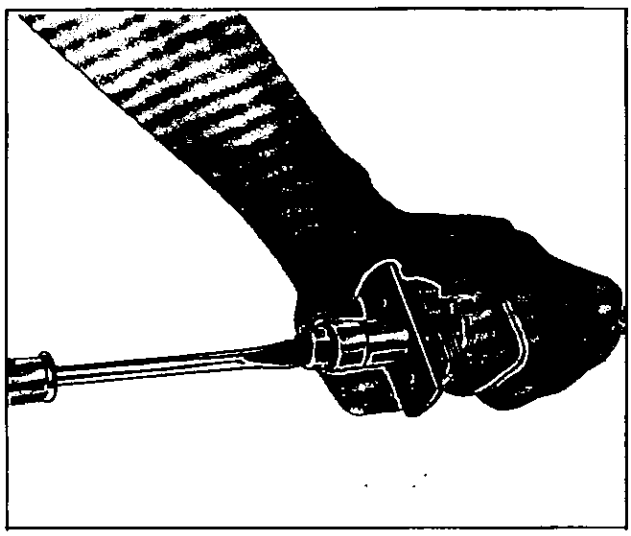

Fig. EE-92 Removal of cam

7. When governor weight and spring are disconnected, be careful not to stretch or deform the governor spring. When disassembly is completed, apply grease to weight pivot.

8. Figure EE-93 shows the exploded view.

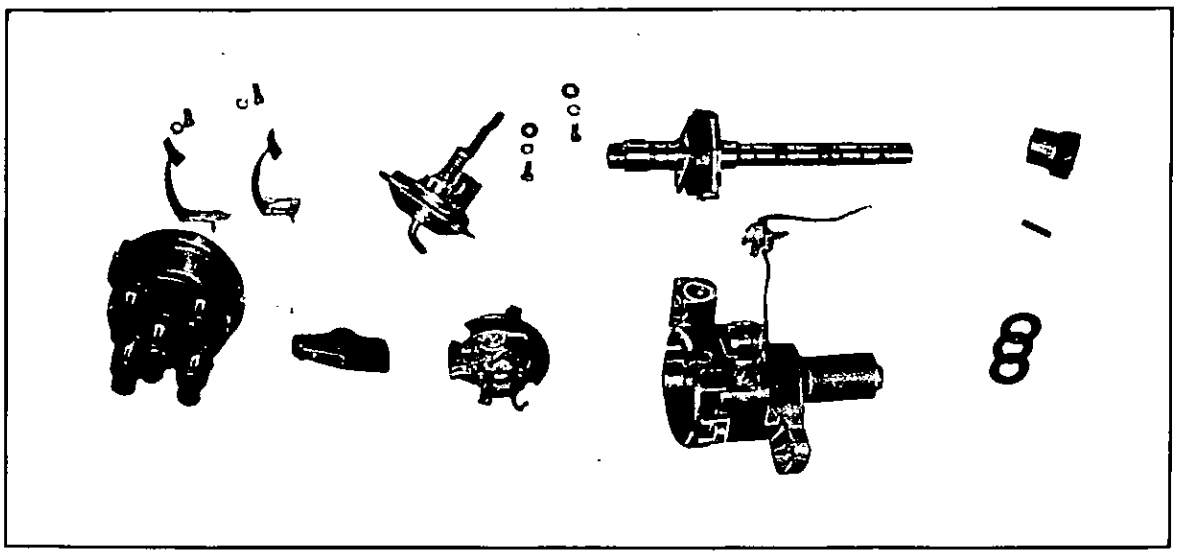

Fig. EE-93 Exploded view (D416-57, D423-53)

Assembly

In case of reassembly do it in just reverse way of disassembly.

Refer to Figure EE-94 at the time of replacement and reassembly of governor spring and cam.

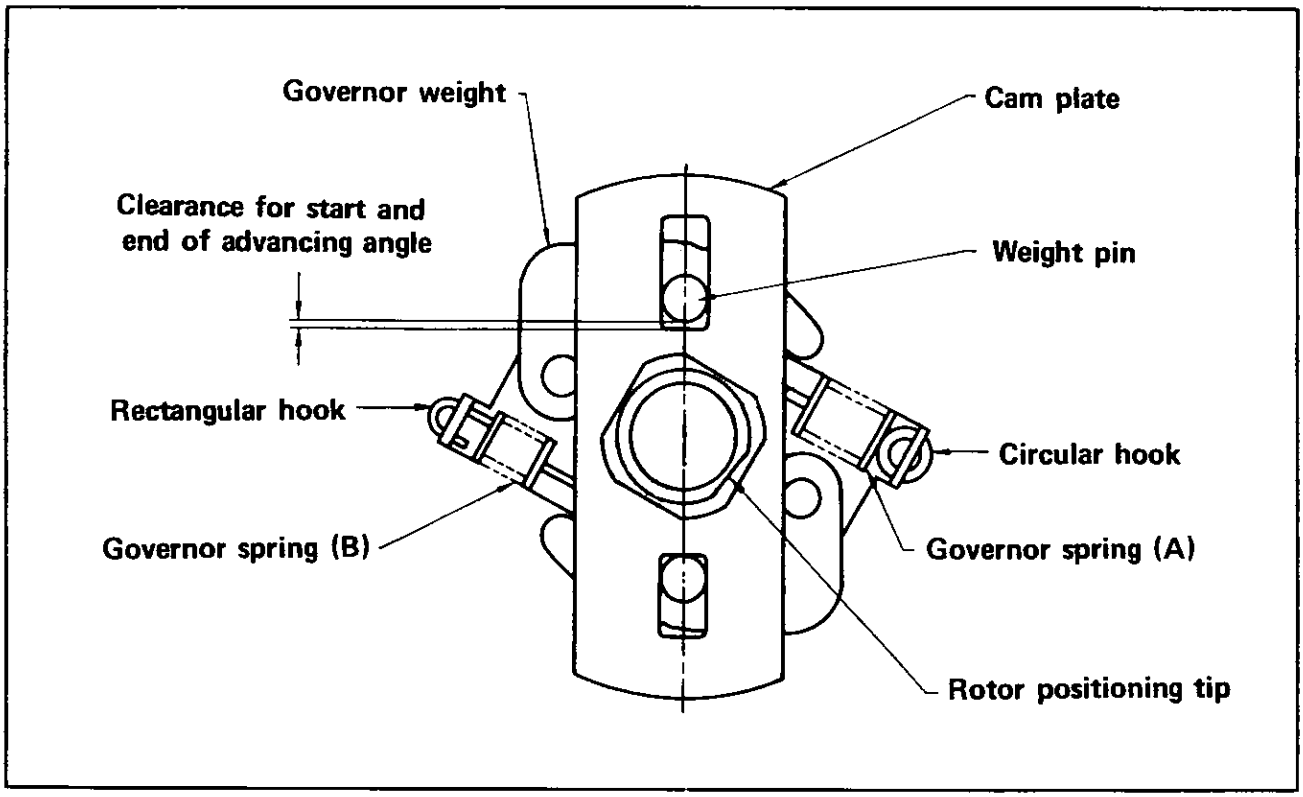

Fig. EE-94 Setting of governor spring and cam

At the time of assembly, rotor head positioning tip at cam is to be set to governor spring circular hook side. Then weight pin for governor spring (A) with circular hook comes in long rectangular hole. It leaves clearance at the start and end of advancing. Meanwhile, weight pin on opposite side comes in short rectangular hole. It does not leave clearance either at the start and end of advancing. When assembly is completed, set it to engine after checking advance characteristic and confirming performance. Be sure to make adjustment of ignition timing after this.

Adjustment must be made to let off the distributor point at degree position of upper dead point of first cylinder compression of engine.

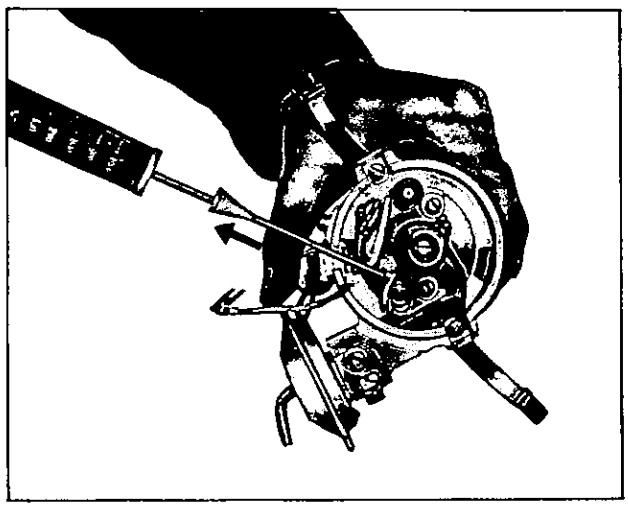

Fig. EE-95 Point pressure test

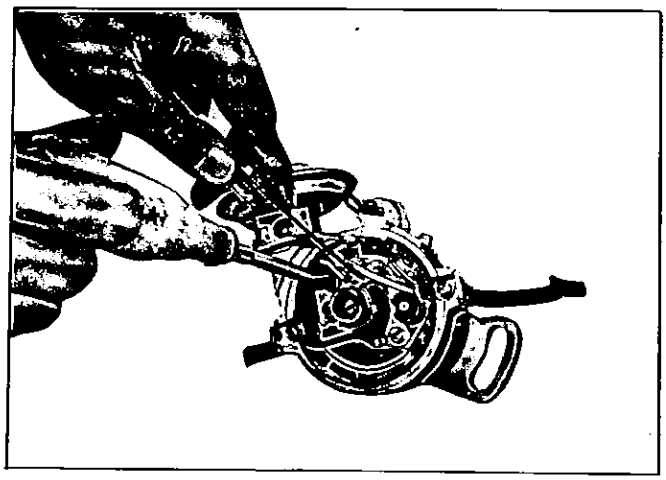

Fig. EE-96 Point gap measure

SERVICE DATA

≪All distributors≫

Point gap	0.45 ~ 0.55 mm (0.0177 ~ 0.0217 in.)
Point pressure	0.50 ~ 0.65 kg (1.10 ~ 1.43 lbs.)
Shaft diameter (lower part)	$12.45^{-0.010}_{-0.020}$ mm ($0.4902^{-0.0004}_{-0.0008}$ in.)
Housing inner diameter	$12.45^{+0.018}_{0}$ mm ($0.4902^{+0.0007}_{0}$ in.)
Clearance between shaft and housing	0.010 ~ 0.038 mm (0.0004 ~ 0.0015 in.)
Amendment limit of clearance	0.08 mm (0.0031 in.)
Shaft diameter (upper part)	$8^{-0.005}_{-0.014}$ mm ($0.3150^{-0.0002}_{-0.0006}$ in.)
Cam inner diameter	$8^{+0.015}_{0}$ mm ($0.3150^{+0.0006}_{0}$ in.)
Clearance between shaft and cam	0.005 ~ 0.029mm (0.0002 ~ 0.0011 in.)
Weight pivot diameter	$5^{-0.010}_{-0.028}$ mm ($0.1969^{-0.0004}_{-0.0010}$ in.)
Weight hole diameter	$5^{+0.018}_{0}$ mm ($0.1969^{+0.0007}_{0}$ in.)
Clearance between pivot and hole	0.01 ~ 0.046 mm (0.0004 ~ 0.0018 in.)

IGNITION COIL

SPECIFICATION

Item \ Make / Model	HANSHIN	
	HM-12F	HP5-10E
Applied engine	G18	G18 (with emission control system)
Primary voltage -V	12	12
Spark gap -mm (in.)	more than 6 (0.2362)	more than 6 (0.2362)
Primary resistance at 20° C -Ω	3.8	3.8
Secondary resistance at 20° C -KΩ	11.2 ~ 16.8	11.2 ~ 16.8

DESCRIPTION

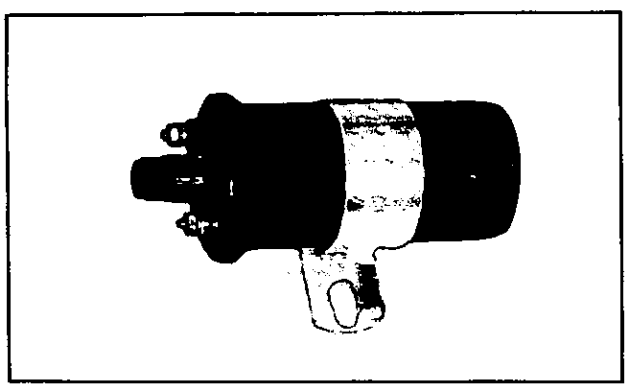

Fig. EE-97 HM-12F

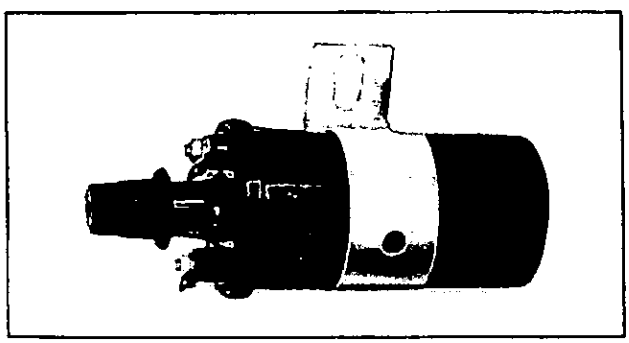

Fig. EE-98 HP5-10E

The ignition coil is a oil type (HP5-10E) and pitch type coil (HM-12F). Dirty ignition coil is not available because it generates high voltage. The case and cap should be cleaned and protected from dust, oil and water.

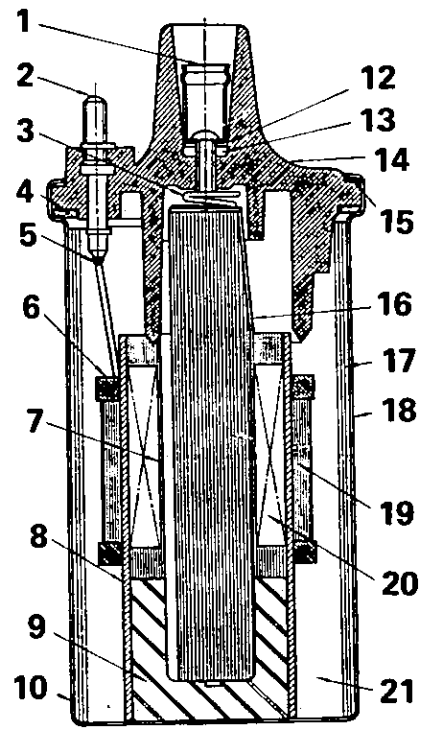

1.	Secondary termianl	12.	Washer
2.	Primary termianl	13.	Seal
3.	Contact spring	14.	Cap
4.	Seal	15.	Washer
5.	Solder	16.	Secondary terminal plate
6.	Guide ring	17.	Primary insulating paper
7.	Secondary tube	18.	Outside iron core
8.	Primary tube	19.	Primary coil
9.	Insulator	20.	Secondary coil
10.	Case	21.	Oil

Fig. EE-99 Construction (HP5-10E)

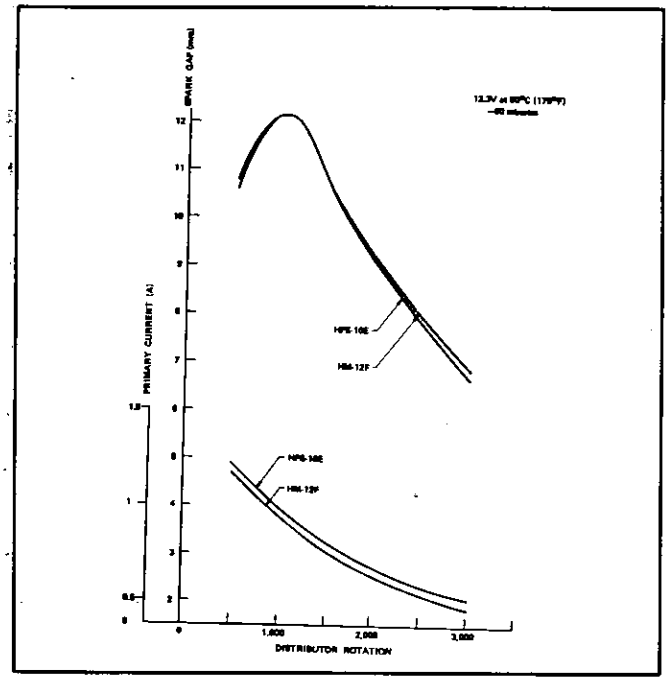

Fig. EE-100 Characteristic curve

SPARK PLUGS

CONTENTS

SPECIFICATION AND SERVICE DATA EE-41
DESCRIPTION EE-41
PERIODIC SERVICE EE-42
INSPECTION EE-42
CLEAN AND REGAP EE-43
TROUBLE DIAGNOSES AND CORRECTIONS EE-44

SPECIFICATION AND SERVICE DATA

Item \ Make	NGK	NGK
Model	BP-6E	B-6E
Applied engine	G18 (with emission control system)	G18
Size (screw diameter x reach) -mm (in.)	14 x 19 (0.55 x 0.75)	14 x 19 (0.55 x 0.75)
Plug gap -mm (in.)	0.8∿0.9 (0.031∿0.035)	0.7∿0.8 (0.028∿0.031)
Torque -kg-m (ft. lb.)	1.5∿2.0 (10.8∿14.5)	1.5∿2.0 (10.8∿14.5)

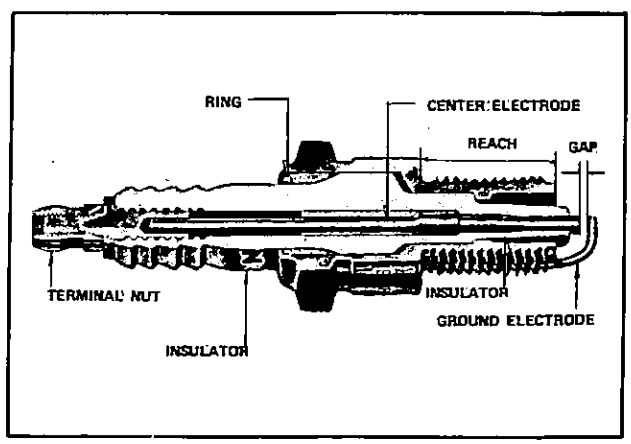

Fig. EE-101 Cross section of spark plug (BP-6E)

PERIODIC SERVICE

Periodically (actual time depending on operating conditions) plugs should be removed for cleaning, inspection and regapping.

INSPECTION

Spark plug life is affected to a large extent by operating conditions and plug life varies accordingly. To insure peak performance, spark plugs should be checked, cleaned and regapped every 12 months or 20,000 km (12,000 miles).

Worn or dirty plugs may give satisfactory operation at idling speed, but under operating conditions they frequently fail. Faulty plugs are evident in a number of ways such as wasting gas, power loss, loss of speed, hard starting and general poor engine performance.

Spark plug failure, in addition to normal wear may be due to dirty or leaded plugs, excessive gap or broken insulator.

Dirty or leaded plugs may be evident by black carbon deposits, or red, brown, yellow or blistered oxide deposits on the plugs. The black deposits are usually the result of slow-speed driving and short runs where sufficient engine operating temperature is seldom reached.

Worn piston rings, faulty ignition, over-rich carburetion and spark plugs which are too "cold" will also result in carbon deposits. Red or brown oxide deposits and a consequence of the use of leaded fuel, usually result in spark plug failure under severe operating conditions. The oxides have no adverse effect on plug operation as long as they remain in a powdery state. But, under high speed or hard pull, the powder oxide deposits melt and form a heavy glaze coating on the insulator which, when hot, acts as a good electrical conductor, allowing current to follow the deposits and short out the plug.

Excessive gap wear on plugs of low mileage, usually indicates the engine is operating at high speeds or loads that are consistently greater than normal or that a plug which is too "hot" is being used. In addition, electrode wear may be the result of plug overheating, caused bv combustion gases leaking through the threads and gasket, due to insufficient compression of the spark plug gasket, dirt under the gasket seat. Too "lean" carburetion will also result in excessive electrode wear.

Broken insulators are usually the result of improper installation or carelessness when regapping the plug. Broken upper insulators usually result from a poor fitting wrench or an outside blow. The cracked insulator may not make itself evident immediately, but soon oil or moisture will penetrate the fracture. The fracture is usually just below the crimped part of shell and may not be visible.

Broken lower insulators usually result from carelessness when regapping and generally are visible. In fairly rare instances, this type of break may result from the plug operating too "hot" such as encountered in sustained periods of high-speed operation or under extremely heavy loads. When regapping a spark plug, to avoid lower insulator breakage, always make the gap adjustment by bending the ground side electrode. Spark plugs with broken insulators should always be replaced.

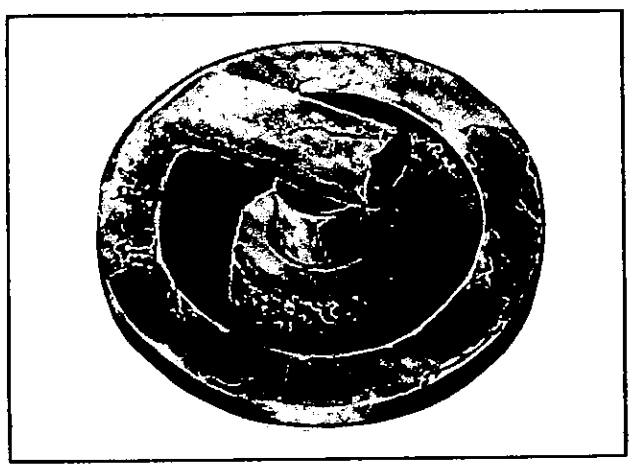

Fig. EE-102 Normal

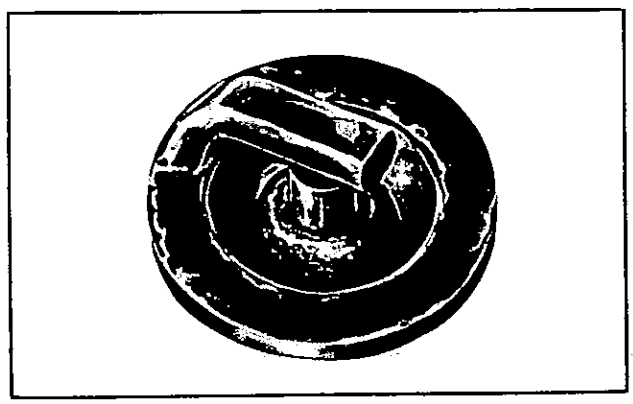

Fig. EE-103 Wet

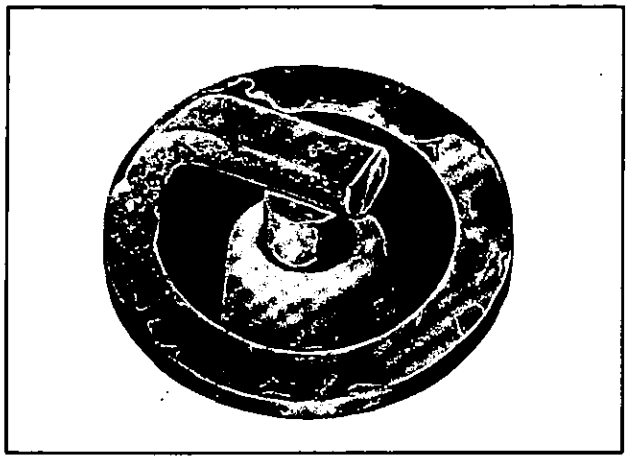

Fig. EE-104 Overheating (1)

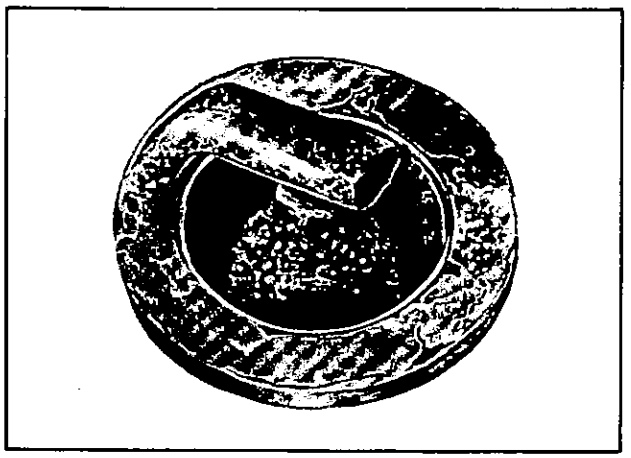

Fig. EE-105 Overheating (2)

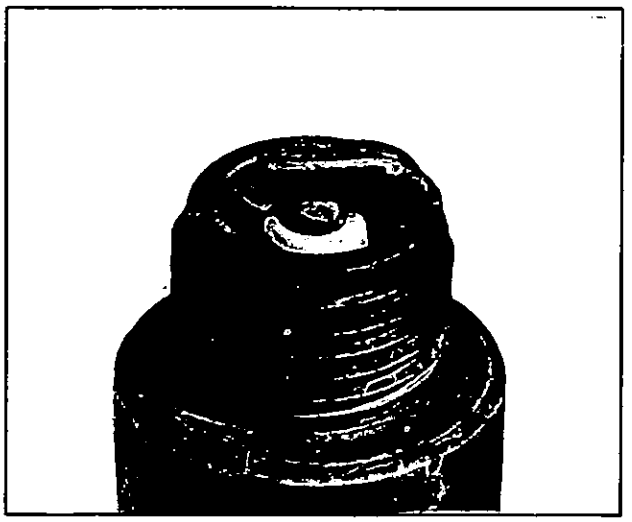

Fig. EE-106 Overheating (3)

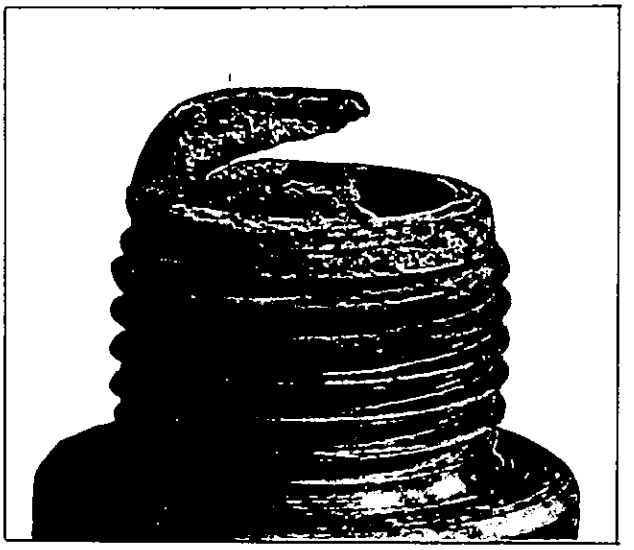

Fig. EE-107 Life

CLEANING AND REGAP

Clean spark plugs thoroughly using an abrasive-type cleaner. All spark plugs must be of the same make and number or heat range. Use a round feeler gauge to adjust the spark plug gaps.

Note: Before adjusting gap, file center electrode flat. In adjusting spark plug gap, never bend center electrode which extends through porcelain center. Always make adjustments by bending ground side electrode.

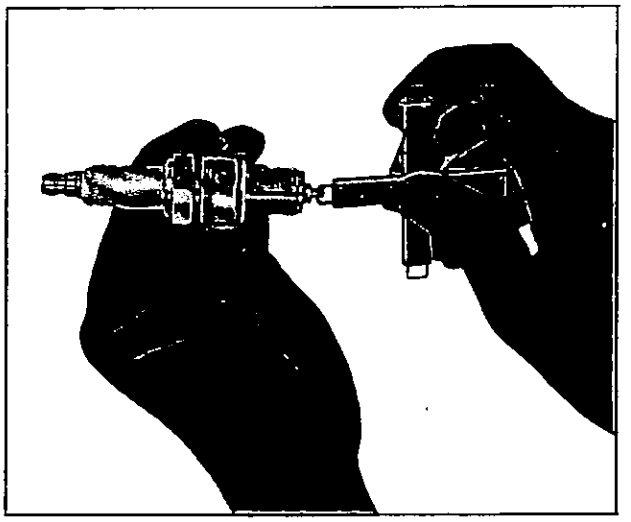

Fig. EE-108 Measuring spark plug gap

TROUBLE DIAGNOSES AND CORRECTIONS

1. When the engine does not start

If there is no trouble in the fuel system, the ignition system should be checked. This can be easily done by detaching the high tension cord from spark plugs, start the engine by the starting motor and observe the condition of the sparks that occur between the high tension cord and cylinder block. After checking this, use the proper countermeasures.

Spark gap	Trouble location	Causes	Remedies
No sparks at all	Distributor	Defective insulation of condenser.	Replace.
		Breakage of lead-wire on low tension side.	Repair.
		Defective insulation of cap and rotor head.	Replace.
		Point does not open or close.	Repair.
	Ignition coil	Wire breakage or short circuit of coil.	Replace with new one.
	High tension code	Wire coming off.	Repair.
		Defective insulation.	Replace.
1 ~ 2 mm (0.0394 ~ 0.0787 in.) or irregular	Distributor	Point gap too wide.	Correct.
		Oil sticking on point.	Clean.
		Point burnt too much.	Replace.
		Layer short-circuit.	Replace with good one.
Less than 6 mm (0.2362 in.)	Spark plugs	Electrode gap too wide.	Correct or replace.
		Too much carbon.	Clean or replace.
		Broken neck of porcelain insulator.	Replace.
		Expirty of plug's life.	Replace.

2. When the engine rotates but does not run smoothly.

In this case, causes are many and varied and it is difficult to point to the right cause, but considering the ignition system only, pay special attention to the following points.

Spark gap	Trouble location	Causes	Remedies
Engine misses very often	Distributor	Dirty point.	Correct.
		Improper point gap.	Correct.
		Leak of electricity of cap and rotor head.	Clean or replace.
		Defective insulation of condenser.	Replace.
		Defective insulation of lead wire of condenser.	Correct.
		Defective arm.	Oil the shaft.
		Defective spring of arm.	Correct or replace.
		Near-breakage of lead wire.	Correct.
		Worn out and shaky breaker plate.	Correct.
		Worn out and shaky distributor shaft.	Correct.
	Ignition coil	Layer short circuit or use of inferior quality.	Replace with good one.
	High tension code	Deterioration of insulation and leak of electricity.	Replace.
	Spark plugs	Dirty.	Clean or replace.
		Electricity leak at the upper porcelain insulator.	Clean.
Engine cause knocking very often	Distributor	Improper and advance timing.	Correct the fitting.
		Coming off or breakage of governor spring.	Correct or replace.
		Worn out a pin or a hole of governor portion.	Replace.
	Spark plugs	Burnt too much.	Replace.
Engine does not give enough power	Distributor	Improper and retarded timing.	Correct the fitting.
		Defective function of governor.	Correct.
		Dirty point.	Correct.
		Point gap too narrow.	Correct.
	Spark plugs	Dirty	Clean.

SERVICE JOURNAL OR BULLETIN REFERENCE

DATE	JOURNAL or BULLETIN No.	PAGE No.	SUBJECT

DATSUN 1800

SERVICE MANUAL

MODEL G18

ENGINE

NISSAN MOTOR CO., LTD.

TOKYO, JAPAN

SECTION SE

SERVICE EQUIPMENT

SE

ENGINE TOOLS SE-1

ENGINE TOOLS

Tool number	Tool name	Figure	Note
ST49700000	Pilot bush puller	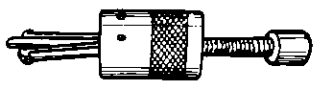	
ST49710000	Valve guide reamer set	 	Valve guide reamer 8 mm Valve guide reamer for cylinder head 14.2 mm
ST49720000	Valve seat cutter	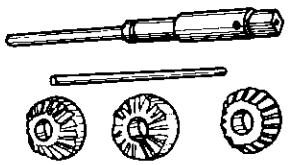	IN. 43 mm dia.-45 deg. IN. 43 mm dia.-30 deg. EX. 36 mm dia.-45 deg. Pilot Cross bar
ST49730000	Valve guide replacer set Valve guide replacer	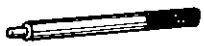	Use when drawing out the guide.
	Valve guide replacer		Use when pressing in the guide.
	Spacer for valve guide replacer		Use for getting the specified length when pressing in the guide.

Tool number	Tool name	Figure	Note
ST49740000	Front oil seal replacer	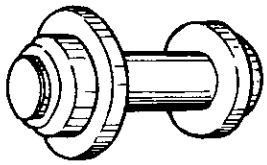	
ST49750000	Rear oil seal drift set Rear oil seal drift Stand for rear oil seal drift	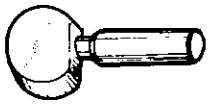 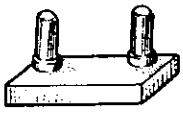	
ST49760000	Engine slinger		
ST49770000	Engine carrier	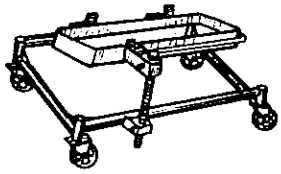	
ST37200G18	Engine attachment	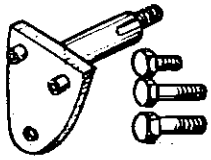	

SERVICE EQUIPMENT

Tool number	Tool name	Figure	Note
ST37100000	Engine stand	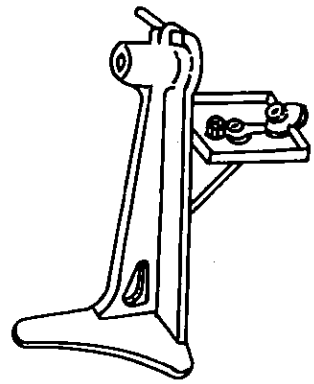	

SERVICE JOURNAL OR BULLETIN REFERENCE

DATE	JOURNAL or BULLETIN No.	PAGE No.	SUBJECT

SERVICE JOURNAL OR BULLETIN REFERENCE

DATE	JOURNAL or BULLETIN No.	PAGE No.	SUBJECT

NISSAN

Printed in Japan Publication No. 48331(30330250)